CS 4803 / 7643: Deep Learning

Topics:

- Recurrent Neural Networks (Cont.)

Zsolt Kira
Georgia Tech

Administrative

- HW3 out
  - Due date pushed back to March 15th to allow you more time
- Next lecture: FB lecture on attention/transformers

Sequences in Input or Output?

- It's a spectrum…

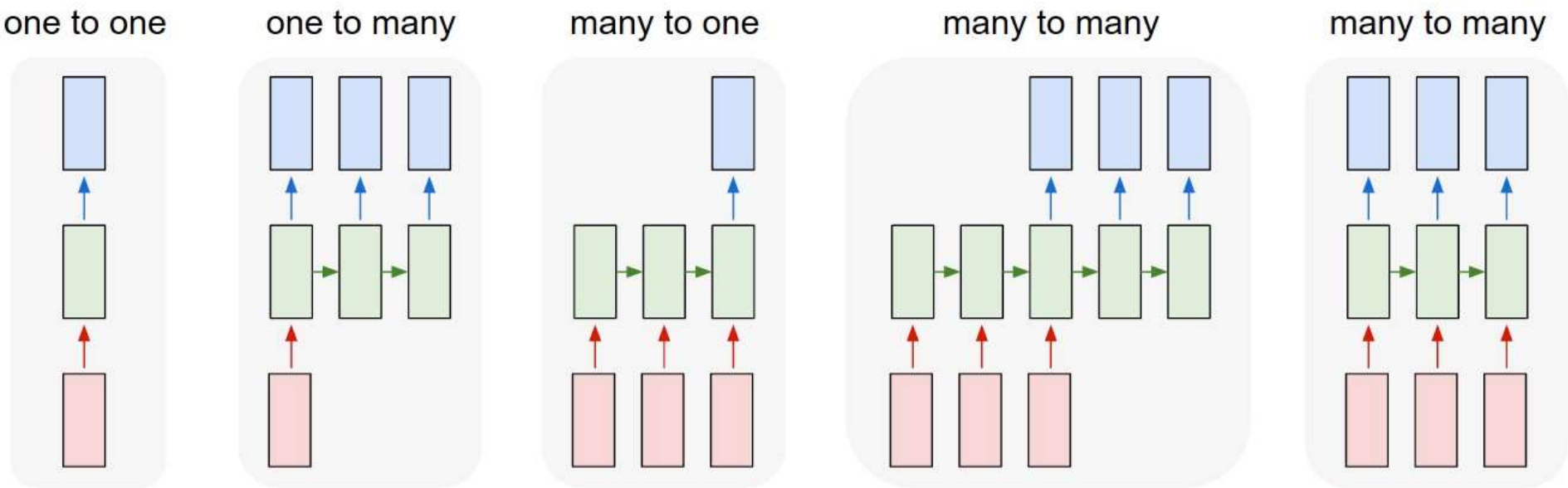

Input: No sequence

Output: No sequence

Example: "standard" classification / regression problems

Input: No sequence

Output: Sequence

Example: Im2Caption

Input: Sequence

Output: No sequence

Example: sentence classification, multiple-choice question answering

Input: Sequence

Output: Sequence

Example: machine translation, video classification, video captioning, open-ended question answering

Image Credit: Andrej Karpathy

2 Key Ideas

- Parameter Sharing
  - in computation graphs = adding gradients
- “Unrolling”
  - in computation graphs with parameter sharing
- Parameter sharing + Unrolling
  - Allows modeling arbitrary sequence lengths!
  - Keeps numbers of parameters in check

Recurrent Neural Network

We can process a sequence of vectors **x** by applying a **recurrence formula** at every time step:

$$\boxed{h_t} = \boxed{f_W}(\boxed{h_{t-1}}, \boxed{x_t})$$

new state

old state

input vector at some time step

some function with parameters W

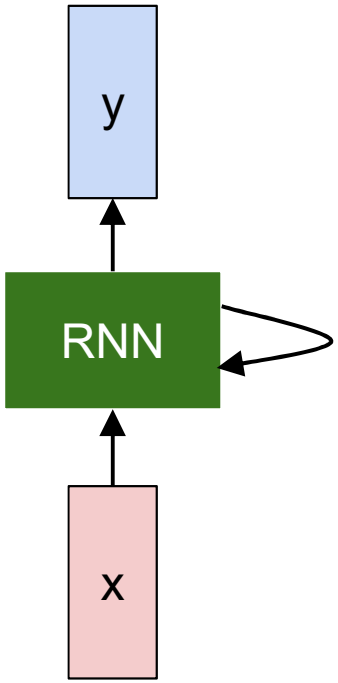

Recurrent Neural Network

We can process a sequence of vectors **x** by applying a **recurrence formula** at every time step:

$$h_t = f_W(h_{t-1}, x_t)$$

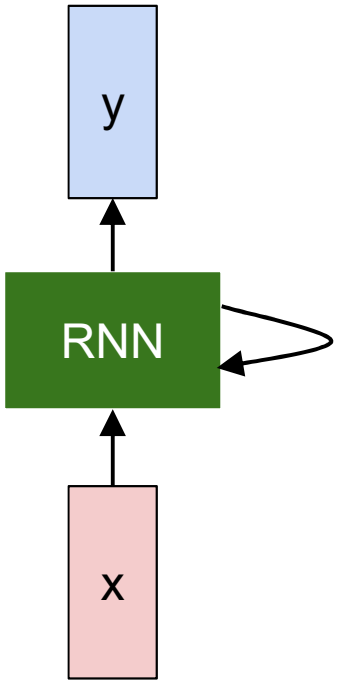

Notice: the same function and the same set of parameters are used at every time step.

(Vanilla) Recurrent Neural Network

The state consists of a single *"hidden"* vector **h**:

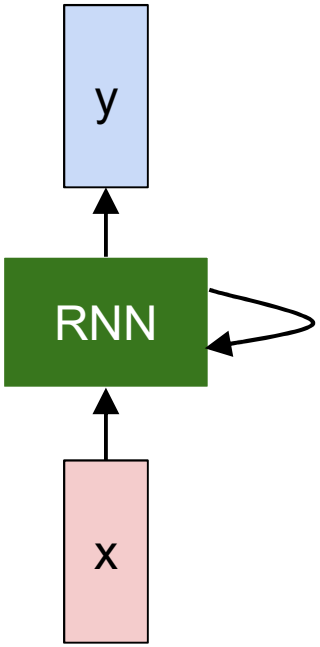

$$y_t = W_{hy} h_t + b_y$$

$$h_t = f_W(h_{t-1}, x_t)$$

$$\downarrow$$

$$h_t = \tanh(W_{hh} h_{t-1} + W_{xh} x_t + b_h)$$

Sometimes called a "Vanilla RNN" or an "Elman RNN" after Prof. Jeffrey Elman

Slide Credit: Fei-Fei Li, Justin Johnson, Serena Yeung, CS 231n

RNN: Computational Graph

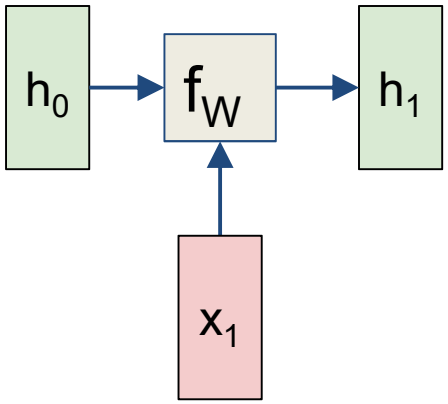

Slide Credit: Fei-Fei Li, Justin Johnson, Serena Yeung, CS 231n

RNN: Computational Graph

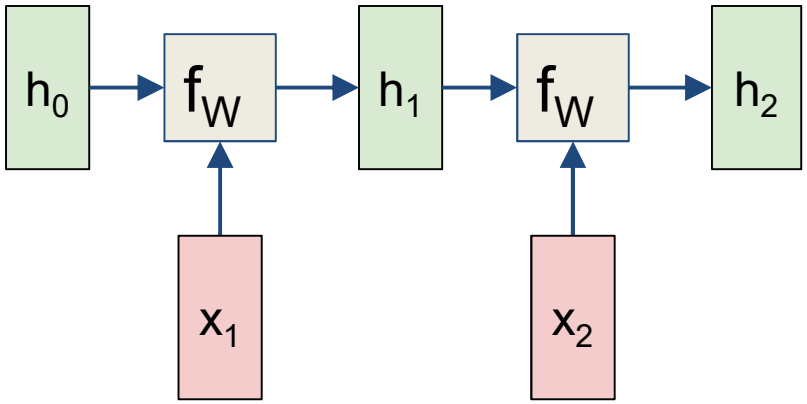

Slide Credit: Fei-Fei Li, Justin Johnson, Serena Yeung, CS 231n

RNN: Computational Graph

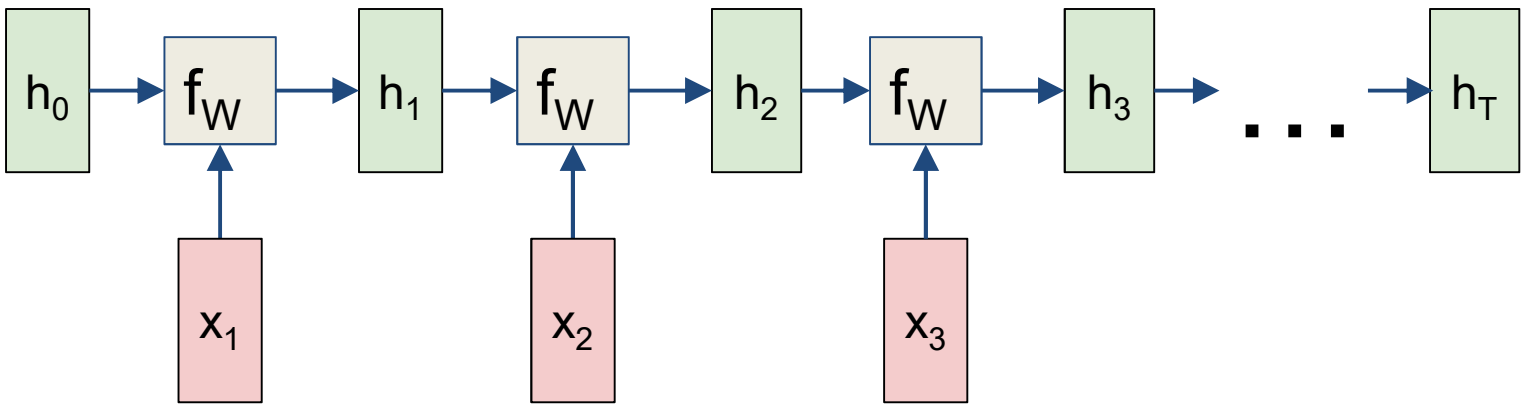

Slide Credit: Fei-Fei Li, Justin Johnson, Serena Yeung, CS 231n

RNN: Computational Graph

Re-use the same weight matrix at every time-step

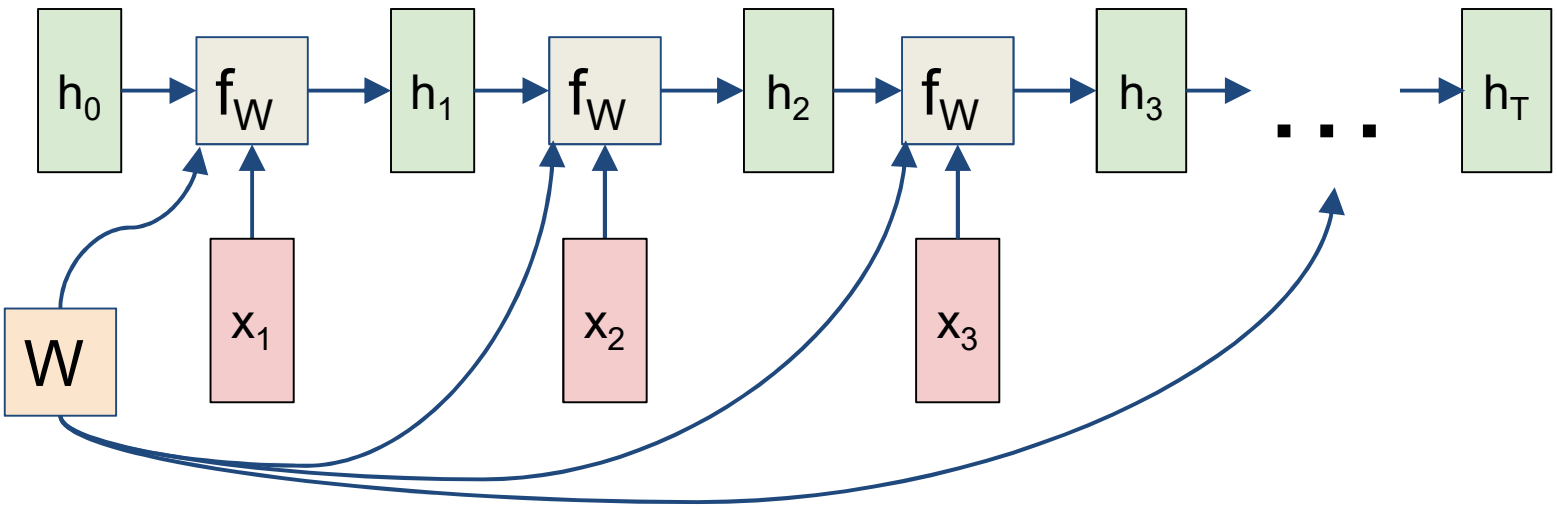

Slide Credit: Fei-Fei Li, Justin Johnson, Serena Yeung, CS 231n

RNN: Computational Graph: Many to Many

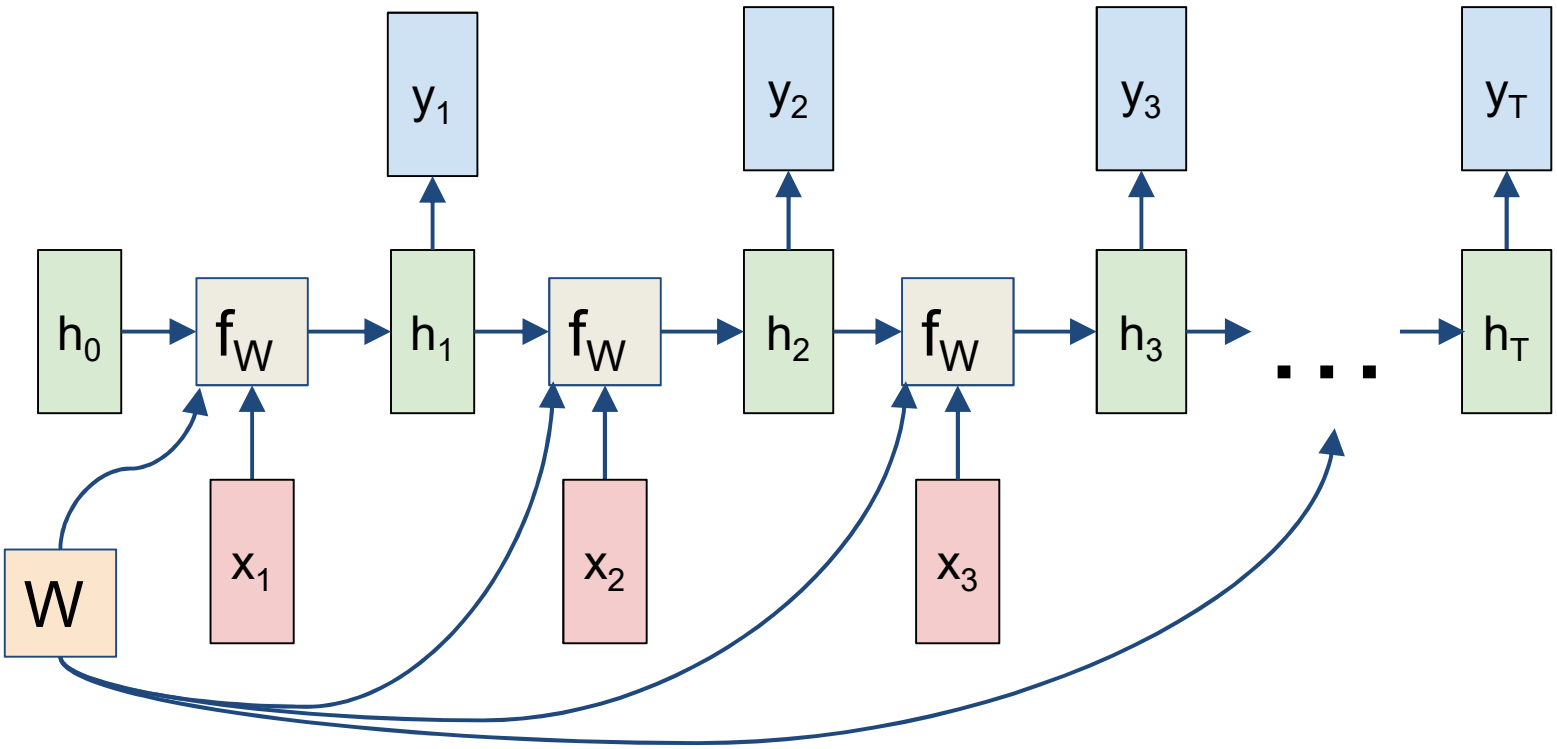

Slide Credit: Fei-Fei Li, Justin Johnson, Serena Yeung, CS 231n

RNN: Computational Graph: Many to Many

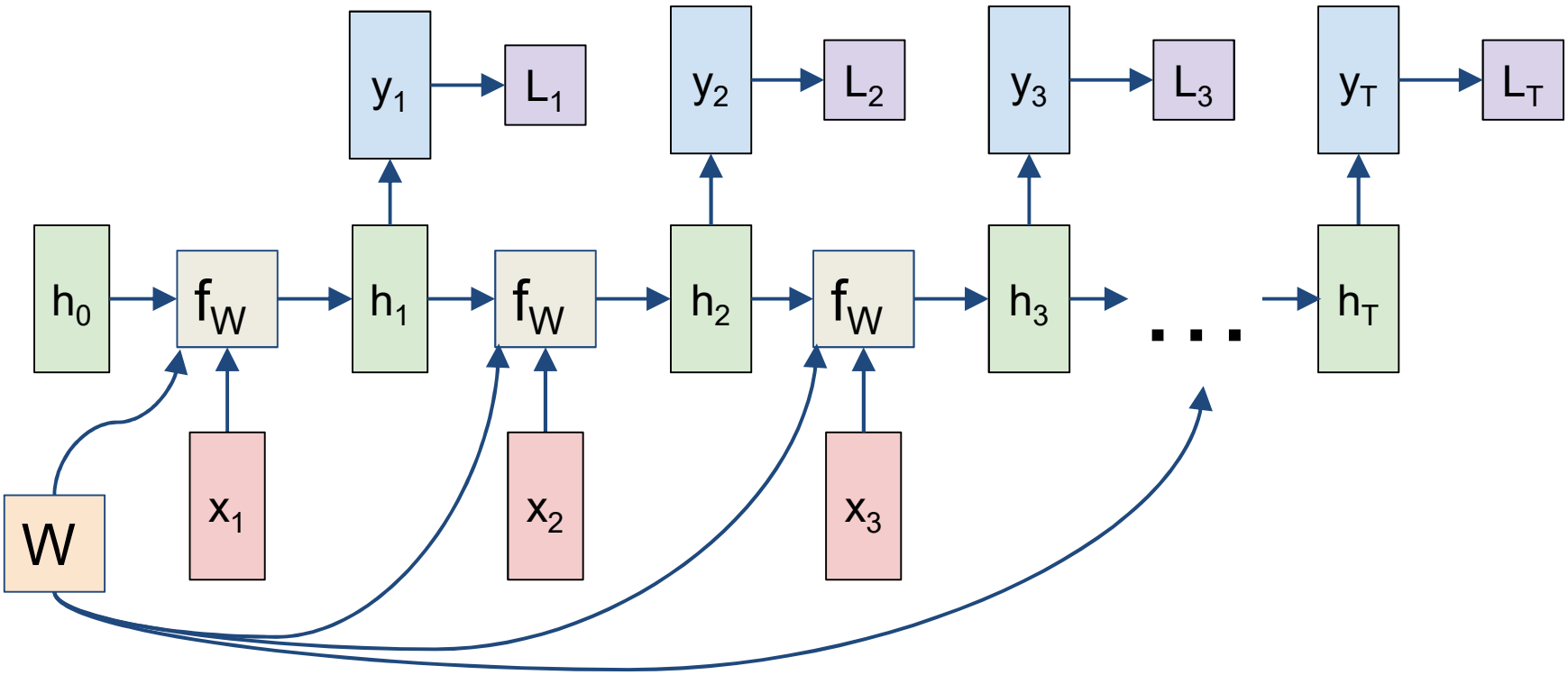

Slide Credit: Fei-Fei Li, Justin Johnson, Serena Yeung, CS 231n

RNN: Computational Graph: Many to Many

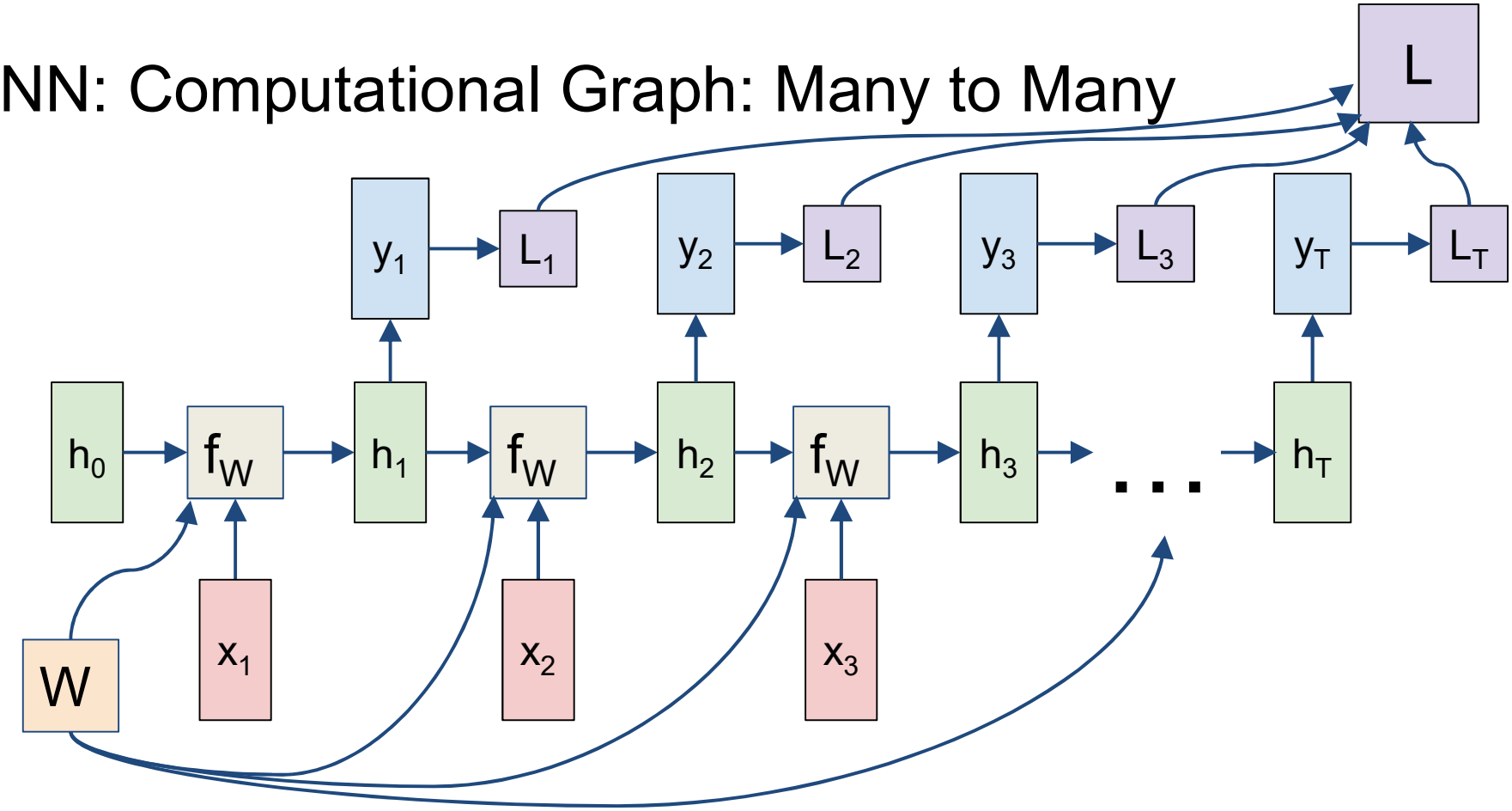

Slide Credit: Fei-Fei Li, Justin Johnson, Serena Yeung, CS 231n

RNN: Computational Graph: Many to One

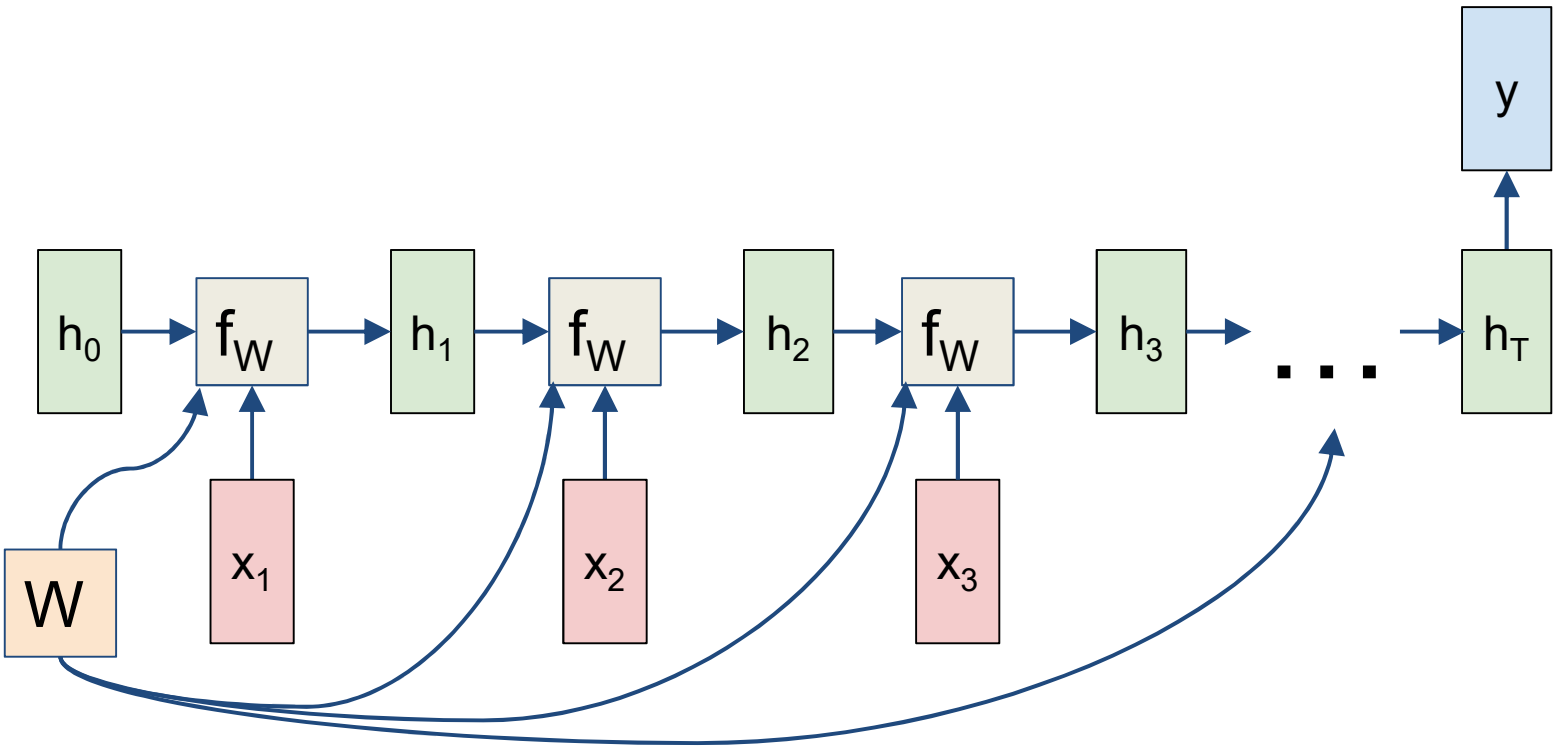

Slide Credit: Fei-Fei Li, Justin Johnson, Serena Yeung, CS 231n

RNN: Computational Graph: One to Many

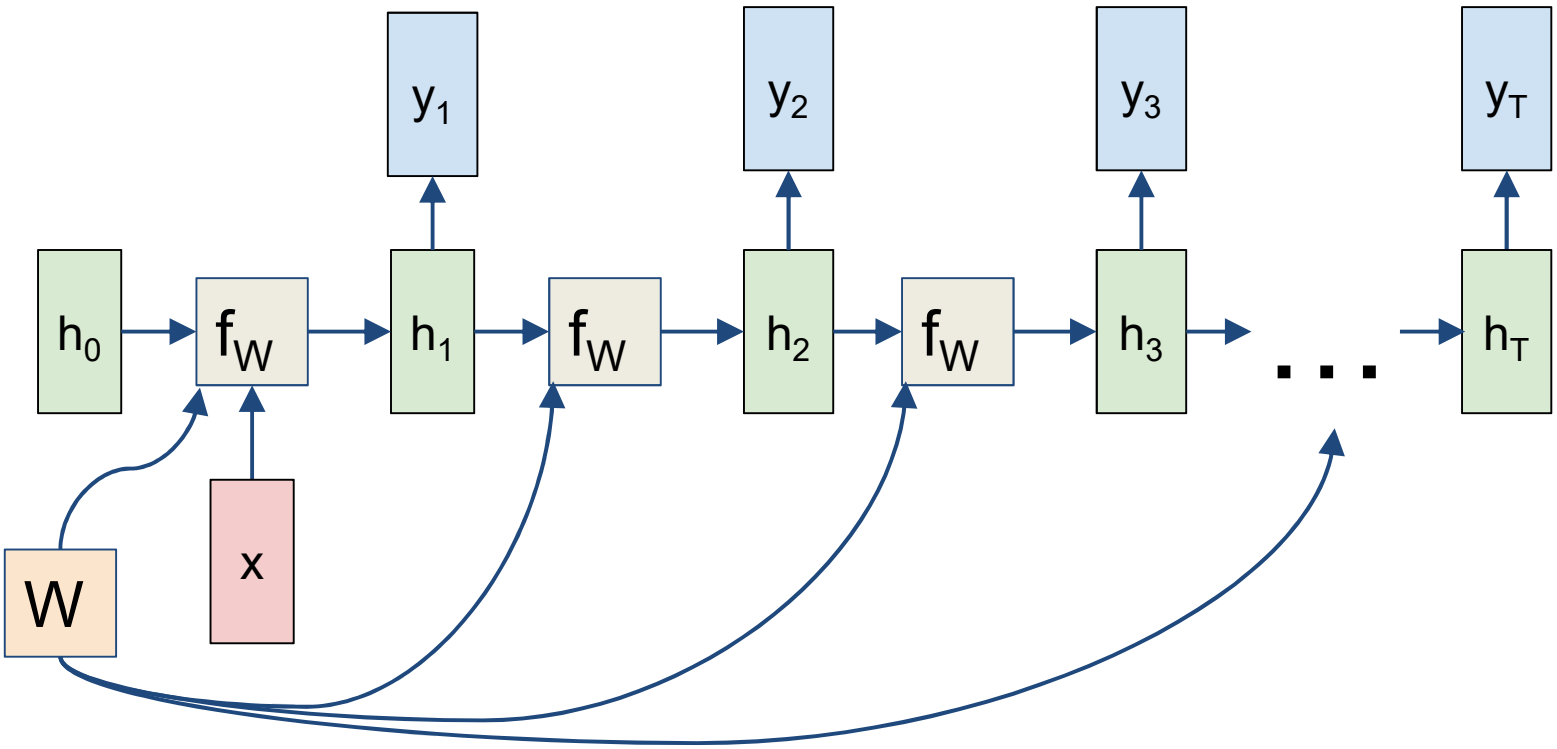

Slide Credit: Fei-Fei Li, Justin Johnson, Serena Yeung, CS 231n

Sequence to Sequence: Many-to-one + one-to-many

Many to one: Encode input sequence in a single vector

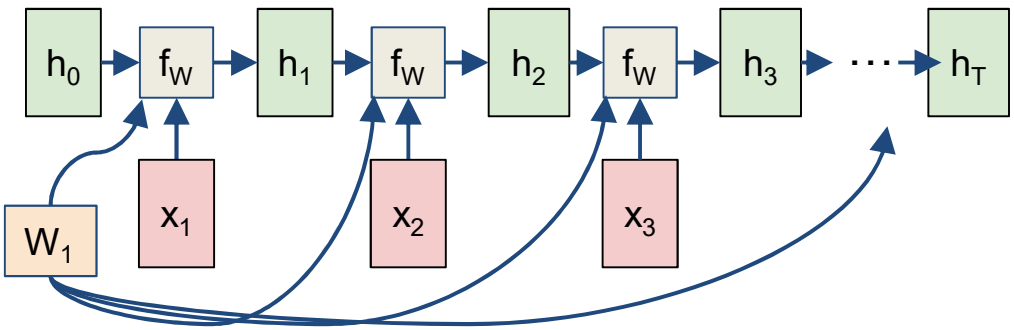

Slide Credit: Fei-Fei Li, Justin Johnson, Serena Yeung, CS 231n

Sequence to Sequence: Many-to-one + one-to-many

One to many: Produce output sequence from single input vector

Many to one: Encode input sequence in a single vector

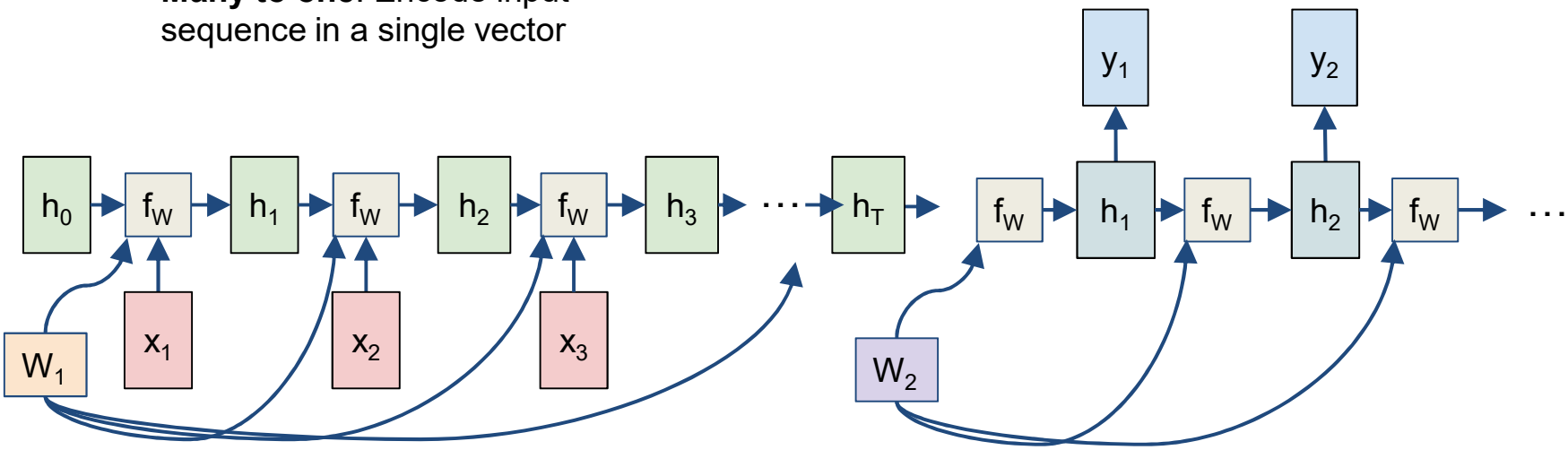

Slide Credit: Fei-Fei Li, Justin Johnson, Serena Yeung, CS 231n

Example:
Character-level
Language Model

Vocabulary:
[h,e,l,o]

Example training sequence:
“hello”

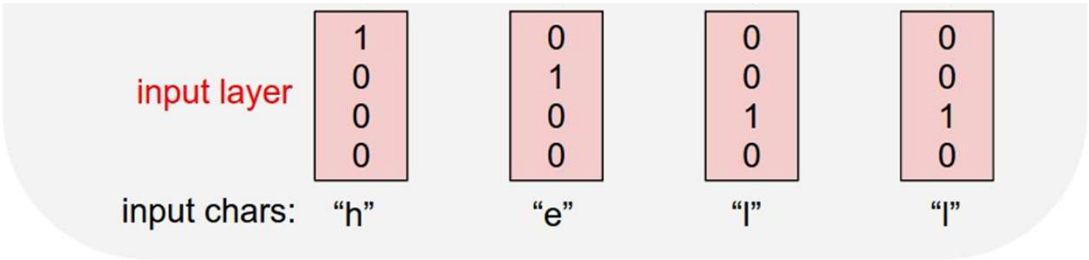

Example: Character-level Language Model

$$h_t = \tanh(W_{hh} h_{t-1} + W_{xh} x_t + b_h)$$

Vocabulary:
[h,e,l,o]

Example training sequence:
"hello"

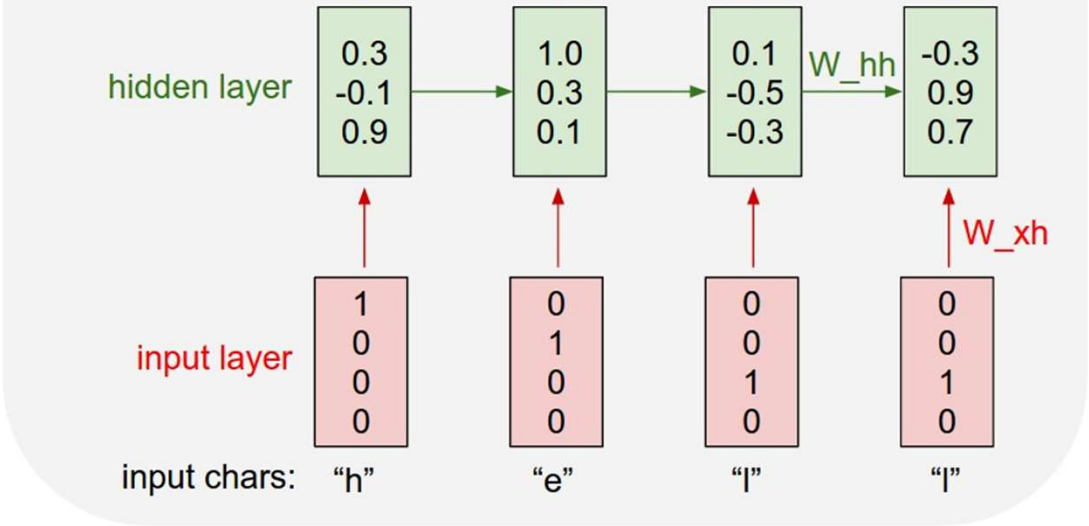

Slide Credit: Fei-Fei Li, Justin Johnson, Serena Yeung, CS 231n

Example: Character-level Language Model

Vocabulary:
[h,e,l,o]

Example training sequence:
"hello"

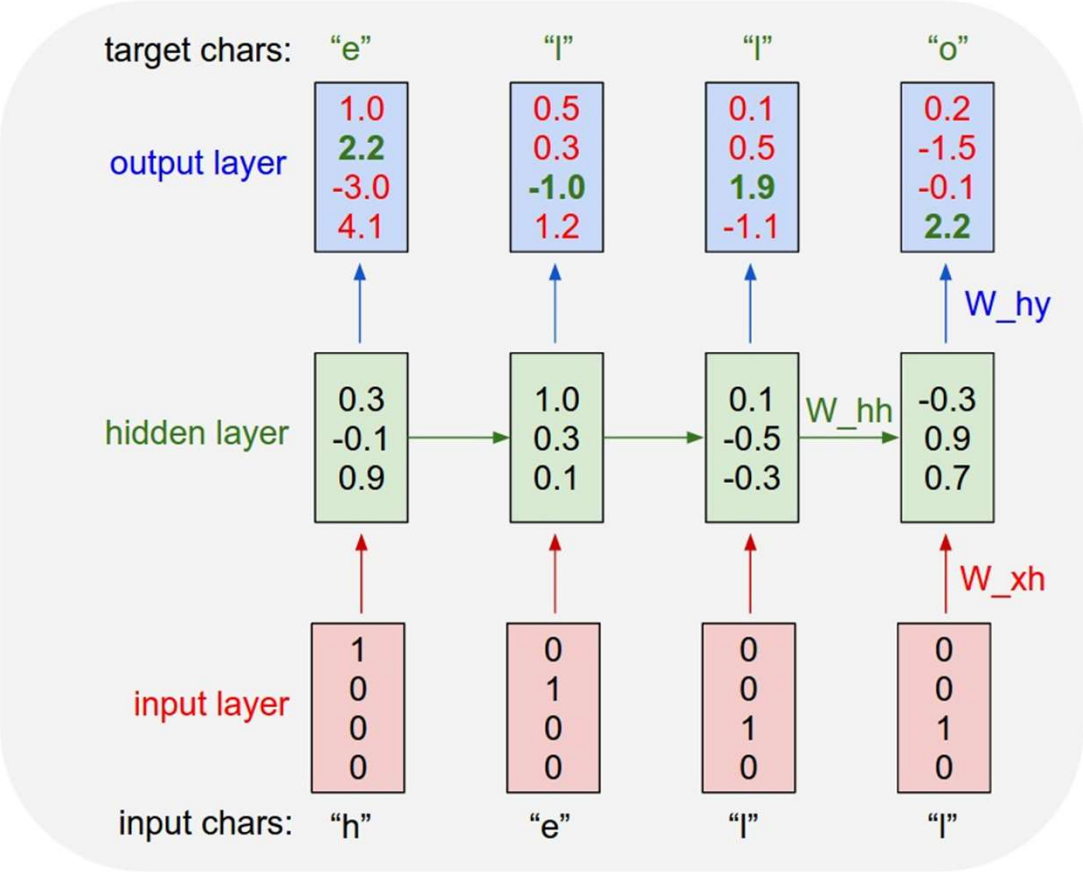

Training Time: MLE / “Teacher Forcing”

Example: Character-level Language Model

Vocabulary:
[h,e,l,o]

Example training sequence:
“hello”

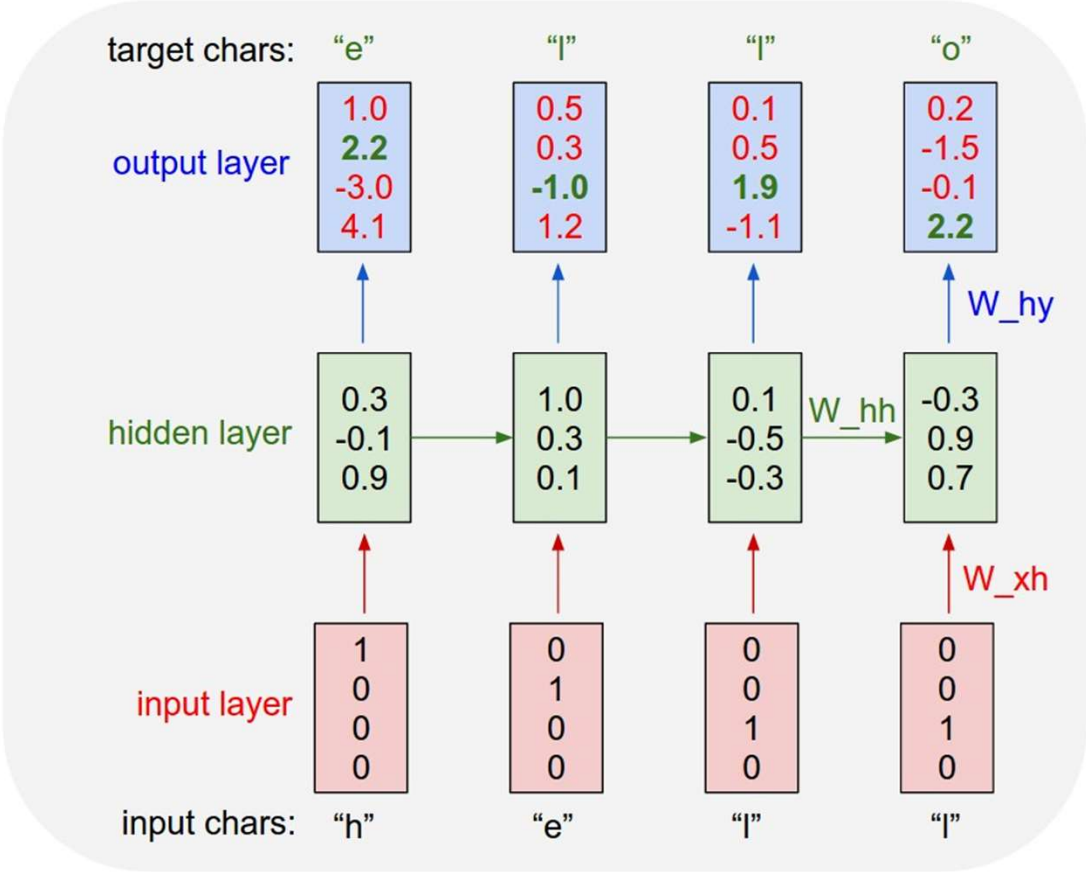

Test Time: Sample / Argmax

Example: Character-level Language Model Sampling

Vocabulary:
[h,e,l,o]

At test-time sample characters one at a time, feed back to model

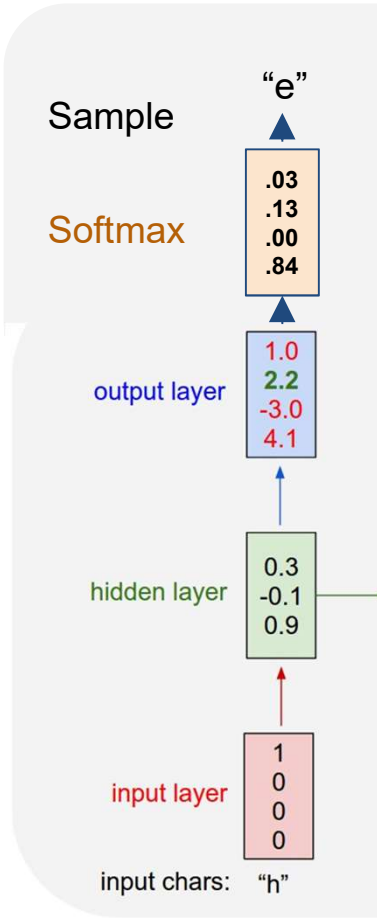

Test Time: Sample / Argmax

Example: Character-level Language Model Sampling

Vocabulary:
[h,e,l,o]

At test-time sample characters one at a time, feed back to model

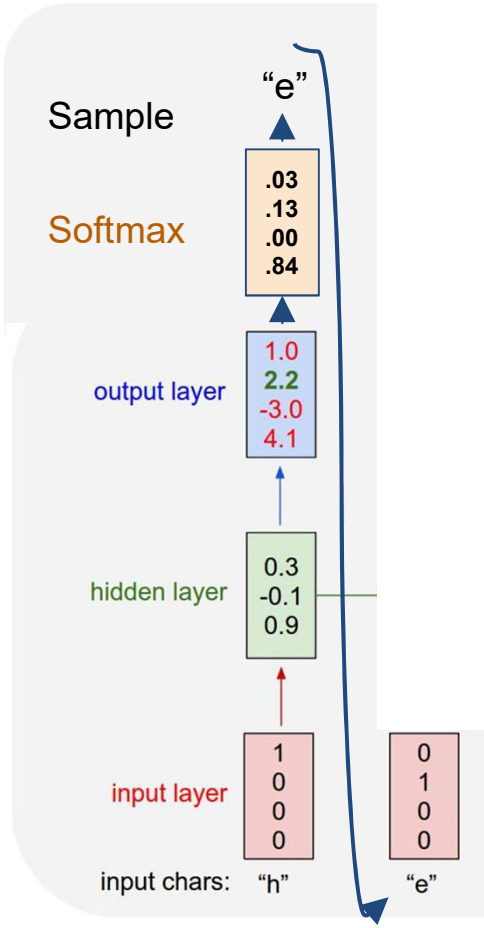

Test Time: Sample / Argmax

Example: Character-level Language Model Sampling

Vocabulary:
[h,e,l,o]

At test-time sample characters one at a time, feed back to model

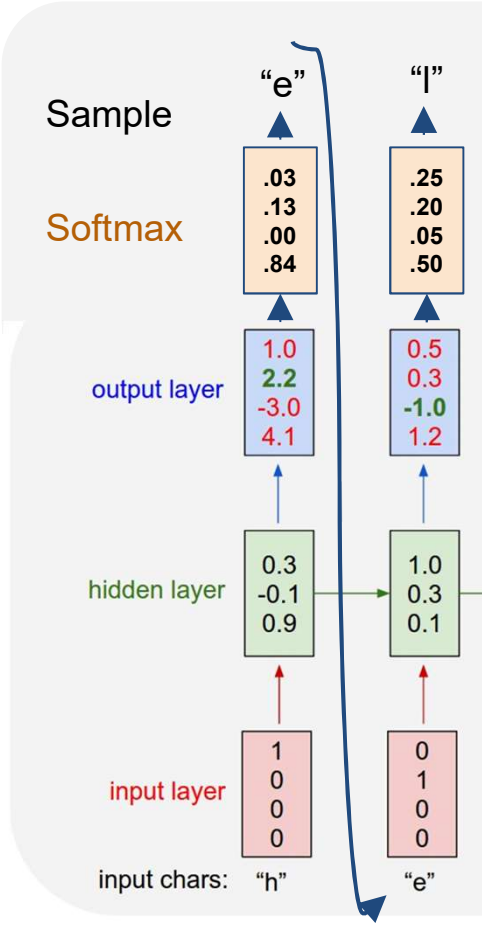

Test Time: Sample / Argmax

Example: Character-level Language Model Sampling

Vocabulary:
[h,e,l,o]

At test-time sample characters one at a time, feed back to model

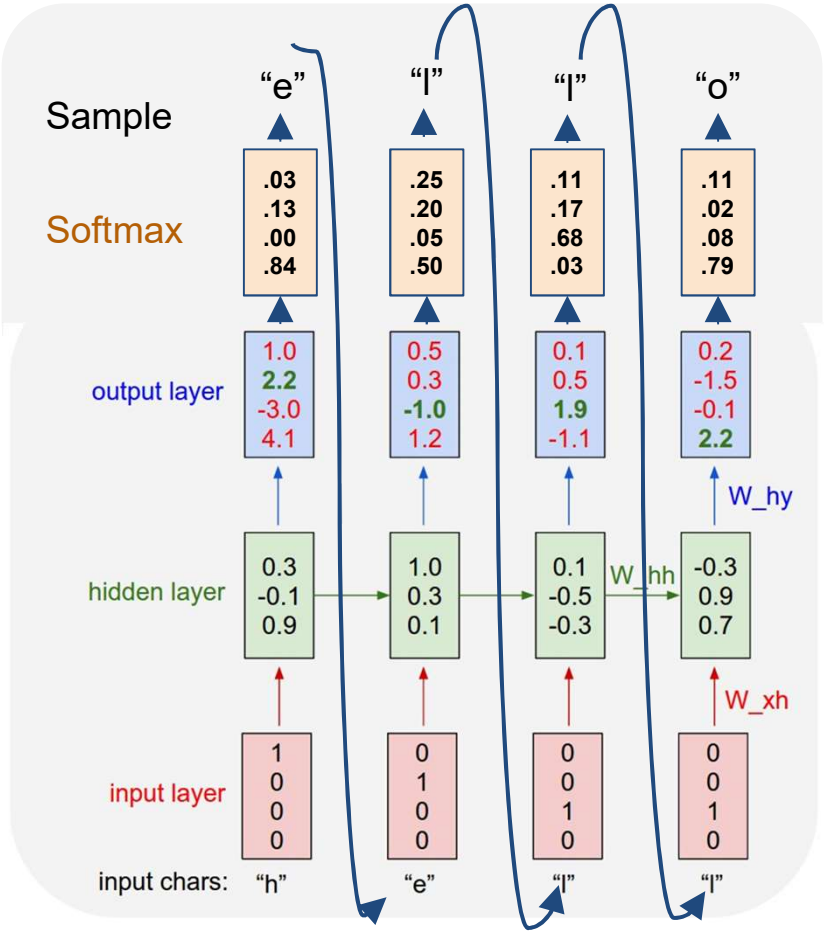

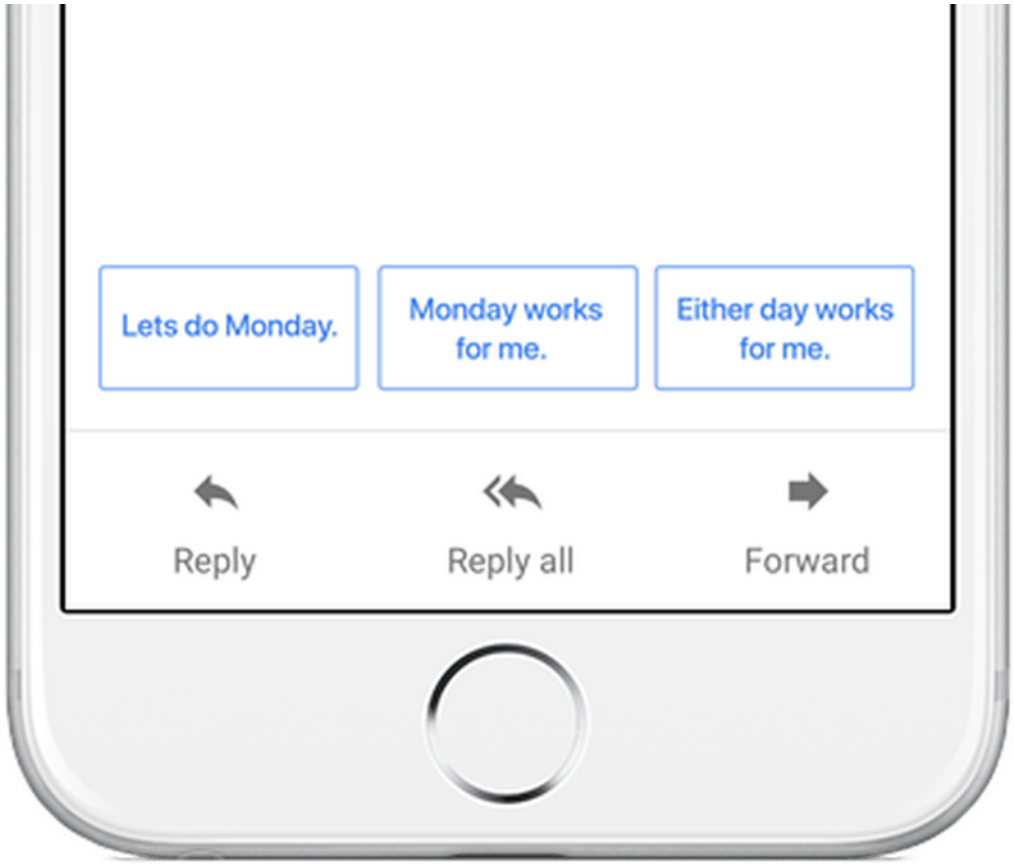
Lets do Monday.
Monday works for me.
Either day works for me.
Reply
Reply all
Forward

Backpropagation through time

Forward through entire sequence to compute loss, then backward through entire sequence to compute gradient

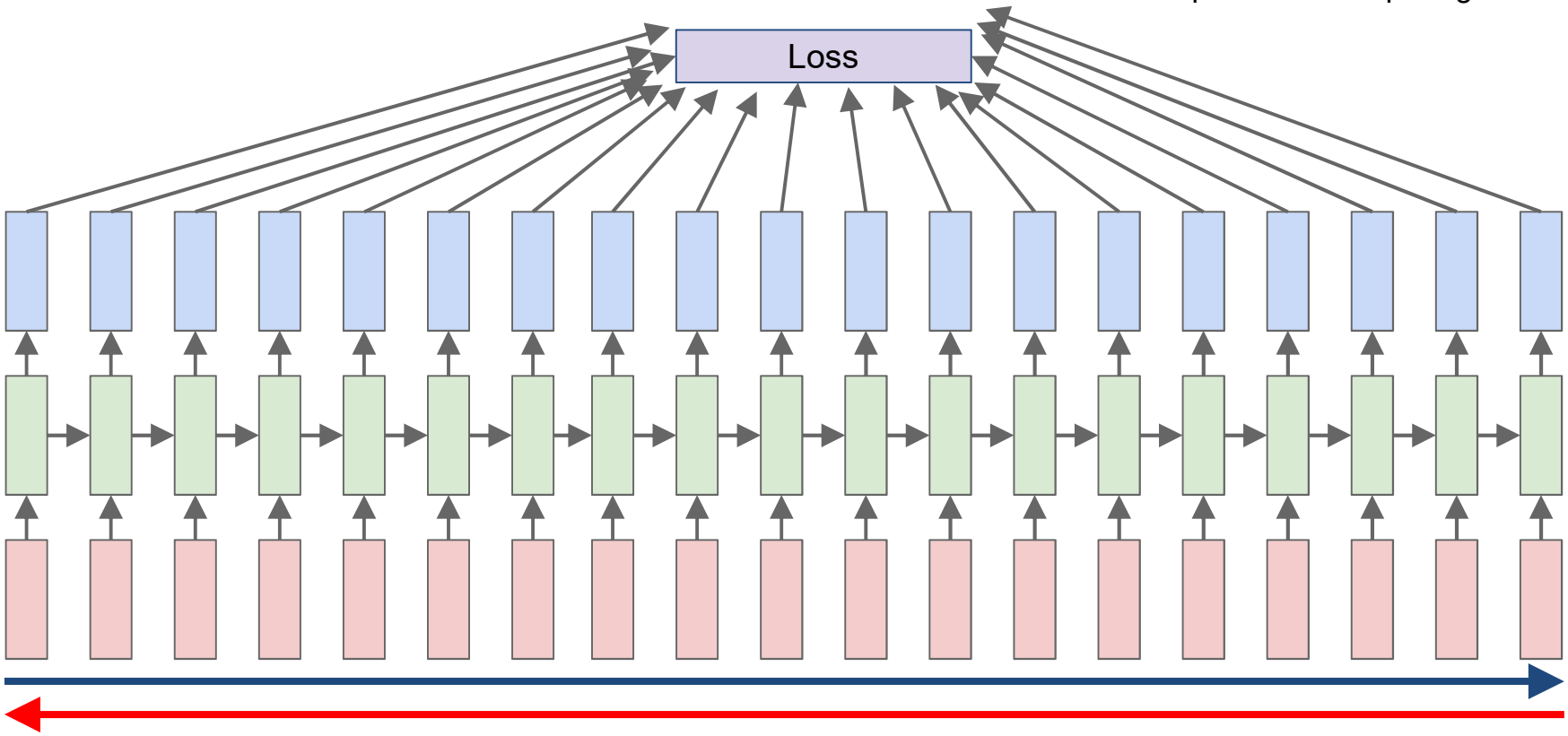

Slide Credit: Fei-Fei Li, Justin Johnson, Serena Yeung, CS 231n

Truncated Backpropagation through time

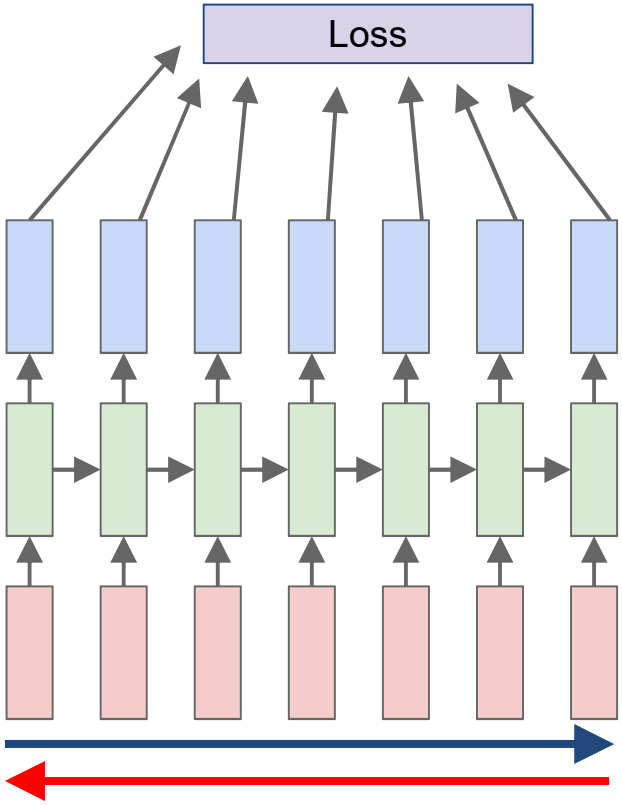

Run forward and backward through chunks of the sequence instead of whole sequence

Slide Credit: Fei-Fei Li, Justin Johnson, Serena Yeung, CS 231n

Truncated Backpropagation through time

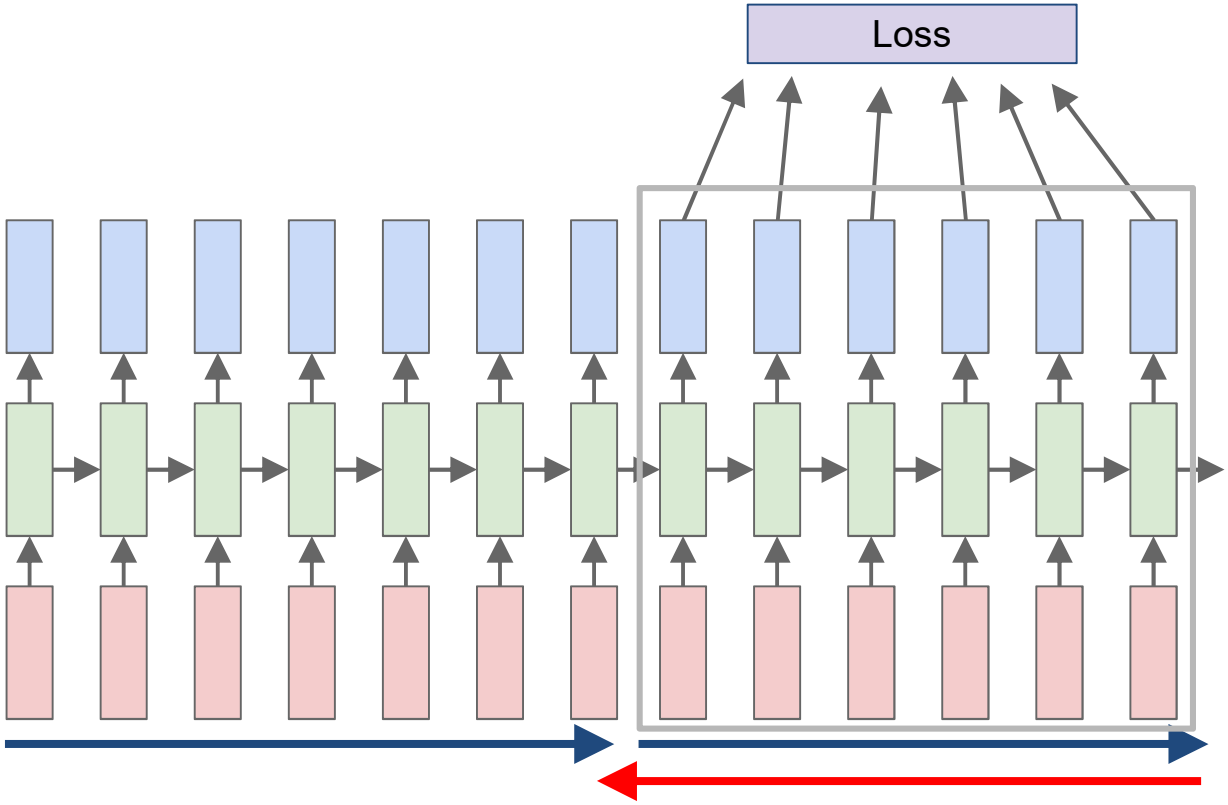

Carry hidden states forward in time forever, but only backpropagate for some smaller number of steps

Slide Credit: Fei-Fei Li, Justin Johnson, Serena Yeung, CS 231n

Truncated Backpropagation through time

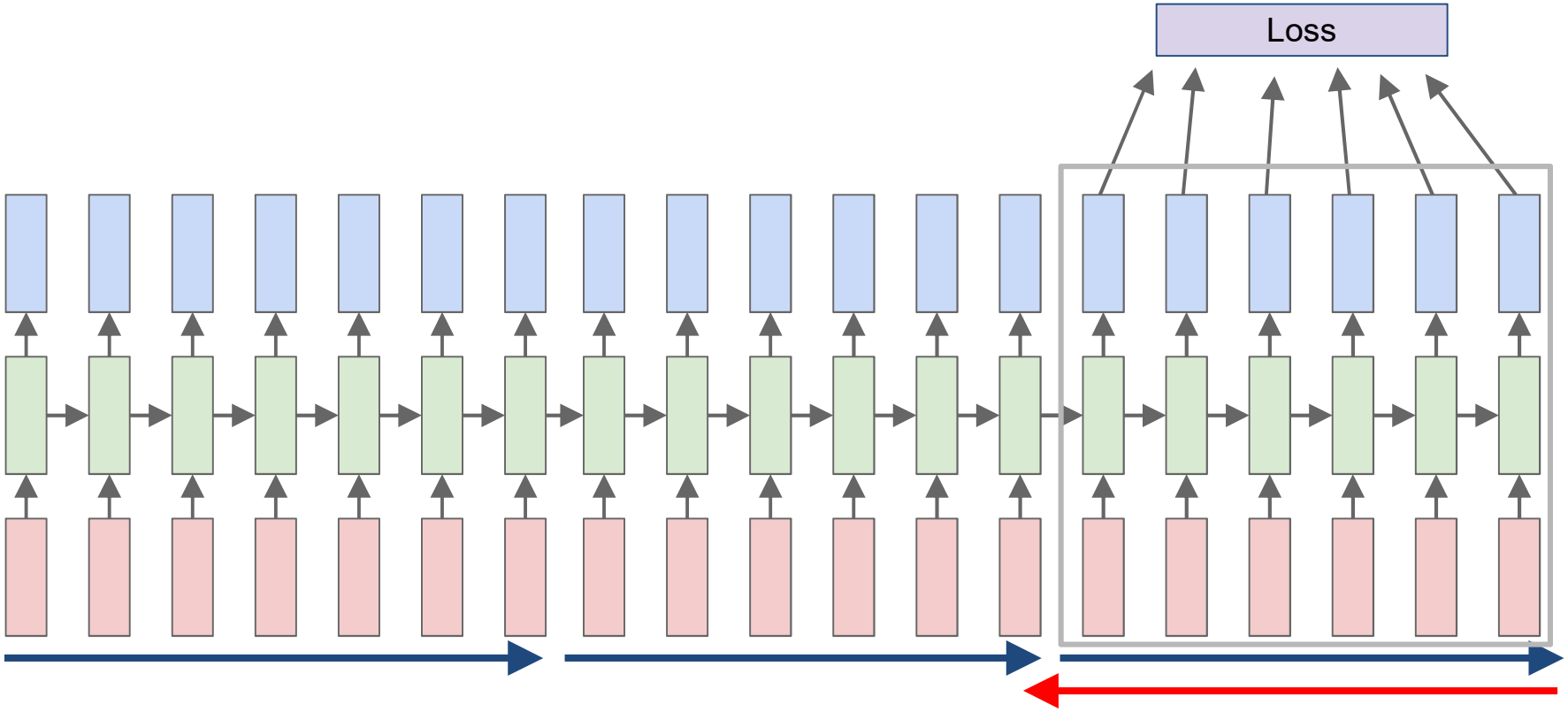

Slide Credit: Fei-Fei Li, Justin Johnson, Serena Yeung, CS 231n

THE SONNETS

by William Shakespeare

From fairest creatures we desire increase,
That thereby beauty's rose might never die,
But as the riper should by time decease,
His tender heir might bear his memory:
But thou, contracted to thine own bright eyes,
Feed'st thy light's flame with self-substantial fuel,
Making a famine where abundance lies,
Thyself thy foe, to thy sweet self too cruel:
Thou that art now the world's fresh ornament,
And only herald to the gaudy spring,
Within thine own bud buriest thy content,
And tender churl mak'st waste in niggarding:
    Pity the world, or else this glutton be,
    To eat the world's due, by the grave and thee.

When forty winters shall besiege thy brow,
And dig deep trenches in thy beauty's field,
Thy youth's proud livery so gazed on now,
Will be a tatter'd weed of small worth held:
Then being asked, where all thy beauty lies,
Where all the treasure of thy lusty days;
To say, within thine own deep sunken eyes,
Were an all-eating shame, and thriftless praise.
How much more praise deserv'd thy beauty's use,
If thou couldst answer 'This fair child of mine
Shall sum my count, and make my old excuse,'
Proving his beauty by succession thine!
    This were to be new made when thou art old,
    And see thy blood warm when thou feel'st it cold.

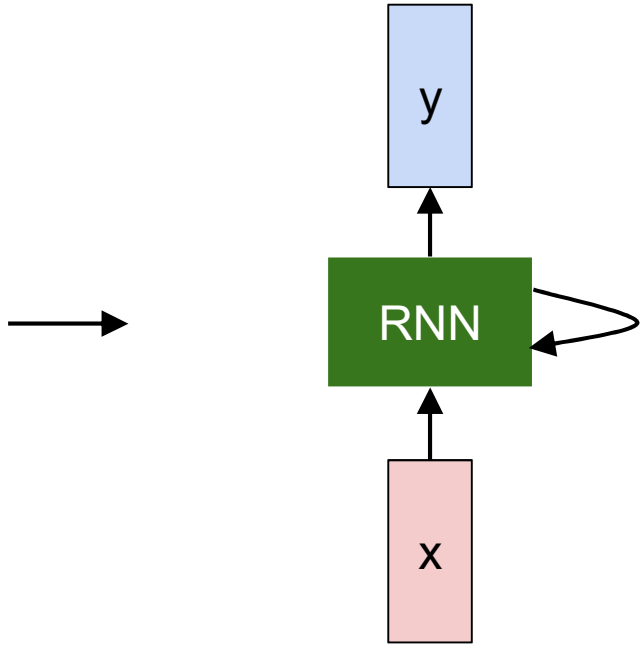

Slide Credit: Fei-Fei Li, Justin Johnson, Serena Yeung, CS 231n

at first:

```
tyntd-iafhatawiaoihrdemot  lytdws  e ,tfti, astai f ogoh eoase rrranbyne 'nhthnee e
plia tklrgd t o idoe ns,smtt   h ne etie h,hregtrs nigtike,aoaenns lng
```

train more

```
"Tmont thithey" fomesscerliund
Keushey. Thom here
sheulke, anmerenith ol sivh I lalterthend Bleipile shuwy fil on aseterlome
coaniogennc Phe lism thond hon at. MeiDimorotion in ther thize."
```

train more

```
Aftair fall unsuch that the hall for Prince Velzonski's that me of
her hearly, and behs to so arwage fiving were to it beloge, pavu say falling misfort
how, and Gogition is so overelical and ofter.
```

train more

```
"Why do what that day," replied Natasha, and wishing to himself the fact the
princess, Princess Mary was easier, fed in had oftened him.
Pierre aking his soul came to the packs and drove up his father-in-law women.
```

Slide Credit: Fei-Fei Li, Justin Johnson, Serena Yeung, CS 231n

```
PANDARUS:
Alas, I think he shall be come approached and the day
When little srain would be attain'd into being never fed,
And who is but a chain and subjects of his death,
I should not sleep.

Second Senator:
They are away this miseries, produced upon my soul,
Breaking and strongly should be buried, when I perish
The earth and thoughts of many states.

DUKE VINCENTIO:
Well, your wit is in the care of side and that.

Second Lord:
They would be ruled after this chamber, and
my fair nues begun out of the fact, to be conveyed,
Whose noble souls I'll have the heart of the wars.

Clown:
Come, sir, I will make did behold your worship.

VIOLA:
I'll drink it.
```

```
VIOLA:
Why, Salisbury must find his flesh and thought
That which I am not aps, not a man and in fire,
To show the reining of the raven and the wars
To grace my hand reproach within, and not a fair are hand,
That Caesar and my goodly father's world;
When I was heaven of presence and our fleets,
We spare with hours, but cut thy council I am great,
Murdered and by thy master's ready there
My power to give thee but so much as hell:
Some service in the noble bondman here,
Would show him to her wine.

KING LEAR:
O, if you were a feeble sight, the courtesy of your law,
Your sight and several breath, will wear the gods
With his heads, and my hands are wonder'd at the deeds,
So drop upon your lordship's head, and your opinion
Shall be against your honour.
```

Slide Credit: Fei-Fei Li, Justin Johnson, Serena Yeung, CS 231n

The Stacks Project: open source algebraic geometry textbook

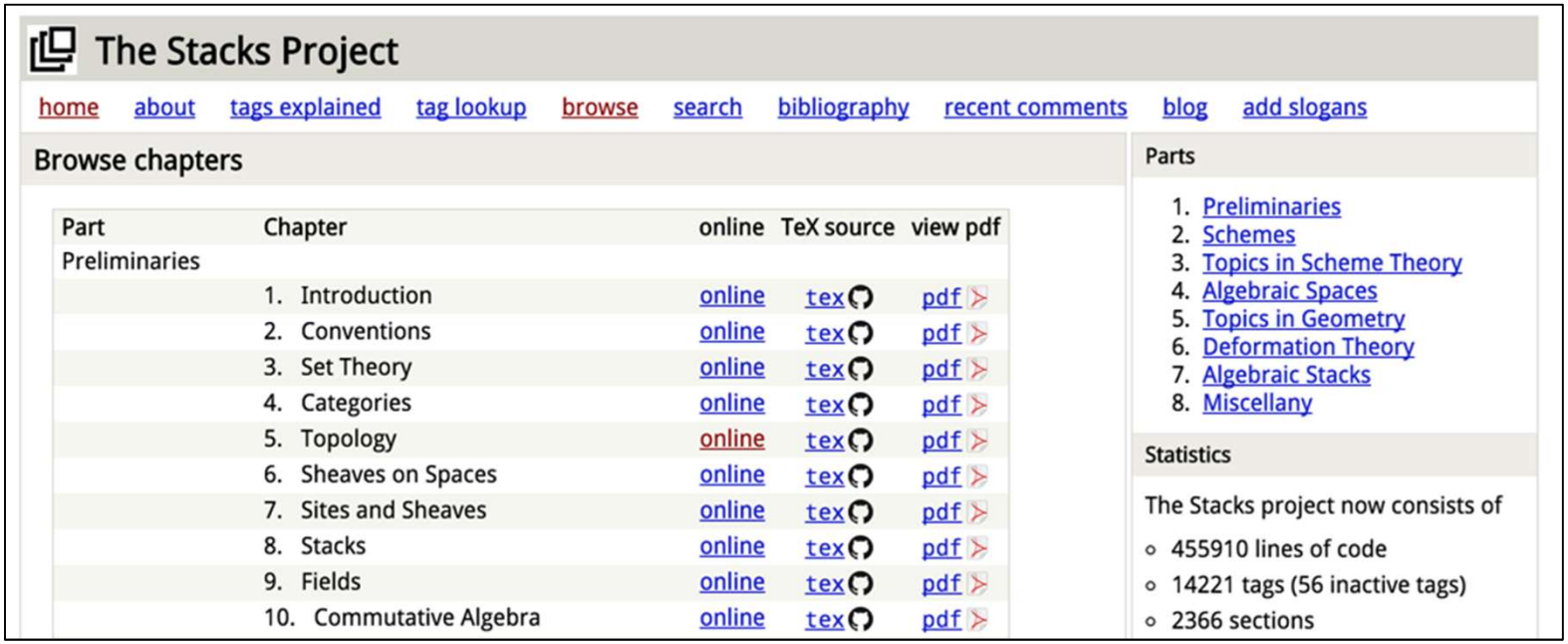

The Stacks Project

home about tags explained tag lookup browse search bibliography recent comments blog add slogans

Browse chapters

Part	Chapter	online	TeX source	view pdf
Preliminaries				
	1. Introduction	online	tex	pdf
	2. Conventions	online	tex	pdf
	3. Set Theory	online	tex	pdf
	4. Categories	online	tex	pdf
	5. Topology	online	tex	pdf
	6. Sheaves on Spaces	online	tex	pdf
	7. Sites and Sheaves	online	tex	pdf
	8. Stacks	online	tex	pdf
	9. Fields	online	tex	pdf
	10. Commutative Algebra	online	tex	pdf

Parts

1. Preliminaries
2. Schemes
3. Topics in Scheme Theory
4. Algebraic Spaces
5. Topics in Geometry
6. Deformation Theory
7. Algebraic Stacks
8. Miscellany

Statistics

The Stacks project now consists of

- 455910 lines of code
- 14221 tags (56 inactive tags)
- 2366 sections

Latex source

http://stacks.math.columbia.edu/
The stacks project is licensed under the GNU Free Documentation License

For $\bigoplus_{n=1,\ldots,m}$ where $\mathcal{L}_{m_\bullet} = 0$, hence we can find a closed subset $\mathcal{H}$ in $\mathcal{H}$ and any sets $\mathcal{F}$ on X, U is a closed immersion of S, then $U \to T$ is a separated algebraic space.

Proof. Proof of (1). It also start we get

$$S = \mathrm{Spec}(R) = U \times_X U \times_X U$$

and the comparicoly in the fibre product covering we have to prove the lemma generated by $\coprod Z \times_U U \to V$. Consider the maps M along the set of points Sch_{fppf} and $U \to U$ is the fibre category of S in U in Section, ?? and the fact that any U affine, see Morphisms, Lemma ??. Hence we obtain a scheme S and any open subset $W \subset U$ in $Sh(G)$ such that $\mathrm{Spec}(R') \to S$ is smooth or an

$$U = \bigcup U_i \times_{S_i} U_i$$

which has a nonzero morphism we may assume that f_i is of finite presentation over S. We claim that $\mathcal{O}_{X,x}$ is a scheme where $x, x', s'' \in S'$ such that $\mathcal{O}_{X,x'} \to \mathcal{O}'_{X',x'}$ is separated. By Algebra, Lemma ?? we can define a map of complexes $\mathrm{GL}_{S'}(x'/S'')$ and we win. □

To prove study we see that $\mathcal{F}|_U$ is a covering of $\mathcal{X}'$, and $\mathcal{T}_i$ is an object of $\mathcal{F}_{X/S}$ for $i > 0$ and $\mathcal{F}_p$ exists and let $\mathcal{F}_i$ be a presheaf of $\mathcal{O}_X$-modules on $\mathcal{C}$ as a $\mathcal{F}$-module. In particular $\mathcal{F} = U/\mathcal{F}$ we have to show that

$$\widetilde{M}^\bullet = \mathcal{I}^\bullet \otimes_{\mathrm{Spec}(k)} \mathcal{O}_{S,s} - i_X^{-1}\mathcal{F})$$

is a unique morphism of algebraic stacks. Note that

$$\mathrm{Arrows} = (Sch/S)^{opp}_{fppf}, (Sch/S)_{fppf}$$

and

$$V = \Gamma(S, \mathcal{O}) \longmapsto (U, \mathrm{Spec}(A))$$

is an open subset of X. Thus U is affine. This is a continuous map of X is the inverse, the groupoid scheme S.

Proof. See discussion of sheaves of sets. □

The result for prove any open covering follows from the less of Example ??. It may replace S by $X_{spaces,étale}$ which gives an open subspace of X and T equal to S_{Zar}, see Descent, Lemma ??. Namely, by Lemma ?? we see that R is geometrically regular over S.

Lemma 0.1. *Assume (3) and (3) by the construction in the description.*

Suppose $X = \lim |X|$ (by the formal open covering X and a single map $\underline{Proj}_X(\mathcal{A}) = \mathrm{Spec}(B)$ over U compatible with the complex

$$Set(\mathcal{A}) = \Gamma(X, \mathcal{O}_{X,\mathcal{O}_X}).$$

When in this case of to show that $\mathcal{Q} \to \mathcal{C}_{Z/X}$ is stable under the following result in the second conditions of (1), and (3). This finishes the proof. By Definition ?? (without element is when the closed subschemes are catenary. If T is surjective we may assume that T is connected with residue fields of S. Moreover there exists a closed subspace $Z \subset X$ of X where U in X' is proper (some defining as a closed subset of the uniqueness it suffices to check the fact that the following theorem

(1) *f is locally of finite type. Since $S = \mathrm{Spec}(R)$ and $Y = \mathrm{Spec}(R)$.*

Proof. This is form all sheaves of sheaves on X. But given a scheme U and a surjective étale morphism $U \to X$. Let $U \cap U = \coprod_{i=1,\ldots,n} U_i$ be the scheme X over S at the schemes $X_i \to X$ and $U = \lim_i X_i$. □

The following lemma surjective restrocomposes of this implies that $\mathcal{F}_{x_0} = \mathcal{F}_{x_0} = \mathcal{F}_{\mathcal{X},\ldots,0}$.

Lemma 0.2. *Let X be a locally Noetherian scheme over S, $E = \mathcal{F}_{X/S}$. Set $\mathcal{I} = \mathcal{J}_1 \subset \mathcal{I}'_n$. Since $\mathcal{I}^n \subset \mathcal{I}^n$ are nonzero over $i_0 \leq \mathfrak{p}$ is a subset of $\mathcal{J}_{n,0} \circ \overline{A}_2$ works.*

Lemma 0.3. *In Situation ??. Hence we may assume $\mathfrak{q}' = 0$.*

Proof. We will use the property we see that $\mathfrak{p}$ is the mext functor (??). On the other hand, by Lemma ?? we see that

$$D(\mathcal{O}_{X'}) = \mathcal{O}_X(D)$$

where K is an F-algebra where δ_{n+1} is a scheme over S. □

Proof. Omitted. □

Lemma 0.1. *Let $\mathcal{C}$ be a set of the construction.*

Let $\mathcal{C}$ be a gerber covering. Let $\mathcal{F}$ be a quasi-coherent sheaves of $\mathcal{O}$-modules. We have to show that

$$\mathcal{O}_{\mathcal{O}_X} = \mathcal{O}_X(\mathcal{L})$$

.

Proof. This is an algebraic space with the composition of sheaves $\mathcal{F}$ on $X_{\acute{e}tale}$ we have

$$\mathcal{O}_X(\mathcal{F}) = \{morph_1 \times_{\mathcal{O}_X} (\mathcal{G}, \mathcal{F})\}$$

where $\mathcal{G}$ defines an isomorphism $\mathcal{F} \to \mathcal{F}$ of $\mathcal{O}$-modules. □

Lemma 0.2. *This is an integer $\mathcal{Z}$ is injective.*

Proof. See Spaces, Lemma **??**. □

Lemma 0.3. *Let S be a scheme. Let X be a scheme and X is an affine open covering. Let $\mathcal{U} \subset \mathcal{X}$ be a canonical and locally of finite type. Let X be a scheme. Let X be a scheme which is equal to the formal complex.*

The following to the construction of the lemma follows.

Let X be a scheme. Let X be a scheme covering. Let

$$b : X \to Y' \to Y \to Y \to Y' \times_X Y \to X.$$

be a morphism of algebraic spaces over S and Y.

Proof. Let X be a nonzero scheme of X. Let X be an algebraic space. Let $\mathcal{F}$ be a quasi-coherent sheaf of $\mathcal{O}_X$-modules. The following are equivalent

(1) $\mathcal{F}$ is an algebraic space over S.
(2) If X is an affine open covering.

Consider a common structure on X and X the functor $\mathcal{O}_X(U)$ which is locally of finite type. □

This since $\mathcal{F} \in \mathcal{F}$ and $x \in \mathcal{G}$ the diagram

$$\begin{tikzcd}
\mathcal{S} \arrow[r] \arrow[d] & & \\
\xi \arrow[r] & \mathcal{O}_{X'} \arrow[dr] & \\
\mathrm{gor}_s \arrow[u] & & \\
 & = \alpha' \arrow[r] \arrow[d, leftrightarrow] & \\
 & = \alpha' \arrow[r] & \alpha \\
\mathrm{Spec}(K_\psi) & \mathrm{Mor}_{Sets} & \mathrm{d}(\mathcal{O}_{\mathcal{X}_{X/k}}, \mathcal{G}) \arrow[u, from=1-3, "X"]
\end{tikzcd}$$

is a limit. Then $\mathcal{G}$ is a finite type and assume S is a flat and $\mathcal{F}$ and $\mathcal{G}$ is a finite type f_*. This is of finite type diagrams, and

- the composition of $\mathcal{G}$ is a regular sequence,
- $\mathcal{O}_{X'}$ is a sheaf of rings.

□

Proof. We have see that $X = \mathrm{Spec}(R)$ and $\mathcal{F}$ is a finite type representable by algebraic space. The property $\mathcal{F}$ is a finite morphism of algebraic stacks. Then the cohomology of X is an open neighbourhood of U. □

Proof. This is clear that $\mathcal{G}$ is a finite presentation, see Lemmas **??**.
A *reduced above* we conclude that U is an open covering of $\mathcal{C}$. The functor $\mathcal{F}$ is a "field

$$\mathcal{O}_{X,x} \longrightarrow \mathcal{F}_{\overline{x}} \quad \text{-1}(\mathcal{O}_{X_{\acute{e}tale}}) \longrightarrow \mathcal{O}_{X_\ell}^{-1}\mathcal{O}_{X_\lambda}(\mathcal{O}_{X_\eta}^{\overline{v}})$$

is an isomorphism of covering of $\mathcal{O}_{X_i}$. If $\mathcal{F}$ is the unique element of $\mathcal{F}$ such that X is an isomorphism.
The property $\mathcal{F}$ is a disjoint union of Proposition **??** and we can filtered set of presentations of a scheme $\mathcal{O}_X$-algebra with $\mathcal{F}$ are opens of finite type over S.
If $\mathcal{F}$ is a scheme theoretic image points. □

If $\mathcal{F}$ is a finite direct sum $\mathcal{O}_{X_\lambda}$ is a closed immersion, see Lemma **??**. This is a sequence of $\mathcal{F}$ is a similar morphism.

This repository Search

Explore Gist Blog Help

karpathy

torvalds / linux

Watch 3,711 Star 23,054 Fork 9,141

Linux kernel source tree

520,037 commits 1 branch 420 releases 5,039 contributors

branch: master linux / +

Merge branch 'drm-fixes' of git://people.freedesktop.org/~airlied/linux

torvalds authored 9 hours ago latest commit 4b1706927d

Documentation	Merge git://git.kernel.org/pub/scm/linux/kernel/git/nab/target-pending	6 days ago
arch	Merge branch 'x86-urgent-for-linus' of git://git.kernel.org/pub/scm/l...	a day ago
block	block: discard bdi_unregister() in favour of bdi_destroy()	9 days ago
crypto	Merge git://git.kernel.org/pub/scm/linux/kernel/git/herbert/crypto-2.6	10 days ago
drivers	Merge branch 'drm-fixes' of git://people.freedesktop.org/~airlied/linux	9 hours ago
firmware	firmware/ihex2fw.c: restore missing default in switch statement	2 months ago
fs	vfs: read file_handle only once in handle_to_path	4 days ago
include	Merge branch 'perf-urgent-for-linus' of git://git.kernel.org/pub/scm/...	a day ago
init	init: fix regression by supporting devices with major:minor:offset fo...	a month ago

Code

Pull requests 74

Pulse

Graphs

HTTPS clone URL

https://github.c

You can clone with HTTPS, SSH, or Subversion.

Clone in Desktop

Download ZIP

Slide Credit: Fei-Fei Li, Justin Johnson, Serena Yeung, CS 231n

```c
static void do_command(struct seq_file *m, void *v)
{
  int column = 32 << (cmd[2] & 0x80);
  if (state)
    cmd = (int)(int_state ^ (in_8(&ch->ch_flags) & Cmd) ? 2 : 1);
  else
    seq = 1;
  for (i = 0; i < 16; i++) {
    if (k & (1 << 1))
      pipe = (in_use & UMXTHREAD_UNCCA) +
        ((count & 0x00000000fffffff8) & 0x000000f) << 8;
    if (count == 0)
      sub(pid, ppc_md.kexec_handle, 0x20000000);
    pipe_set_bytes(i, 0);
  }
  /* Free our user pages pointer to place camera if all dash */
  subsystem_info = &of_changes[PAGE_SIZE];
  rek_controls(offset, idx, &soffset);
  /* Now we want to deliberately put it to device */
  control_check_polarity(&context, val, 0);
  for (i = 0; i < COUNTER; i++)
    seq_puts(s, "policy ");
}
```

Generated C code

Slide Credit: Fei-Fei Li, Justin Johnson, Serena Yeung, CS 231n

```
/*
 *  Copyright (c) 2006-2010, Intel Mobile Communications.  All rights reserved.
 *
 *   This program is free software; you can redistribute it and/or modify it
 * under the terms of the GNU General Public License version 2 as published by
 * the Free Software Foundation.
 *
 *        This program is distributed in the hope that it will be useful,
 * but WITHOUT ANY WARRANTY; without even the implied warranty of
 *   MERCHANTABILITY or FITNESS FOR A PARTICULAR PURPOSE.  See the
 *
 *  GNU General Public License for more details.
 *
 *   You should have received a copy of the GNU General Public License
 *    along with this program; if not, write to the Free Software Foundation,
 *  Inc., 675 Mass Ave, Cambridge, MA 02139, USA.
 */

#include <linux/kexec.h>
#include <linux/errno.h>
#include <linux/io.h>
#include <linux/platform_device.h>
#include <linux/multi.h>
#include <linux/ckevent.h>

#include <asm/io.h>
#include <asm/prom.h>
#include <asm/e820.h>
#include <asm/system_info.h>
#include <asm/setew.h>
#include <asm/pgproto.h>
```

Slide Credit: Fei-Fei Li, Justin Johnson, Serena Yeung, CS 231n

```
#include <asm/io.h>
#include <asm/prom.h>
#include <asm/e820.h>
#include <asm/system_info.h>
#include <asm/setew.h>
#include <asm/pgproto.h>

#define REG_PG    vesa_slot_addr_pack
#define PFM_NOCOMP  AFSR(0, load)
#define STACK_DDR(type)     (func)

#define SWAP_ALLOCATE(nr)     (e)
#define emulate_sigs()  arch_get_unaligned_child()
#define access_rw(TST)  asm volatile("movd %%esp, %0, %3" : : "r" (0));   \
  if (__type & DO_READ)

static void stat_PC_SEC __read_mostly offsetof(struct seq_argsqueue, \
          pC>[1]);

static void
os_prefix(unsigned long sys)
{
#ifdef CONFIG_PREEMPT
  PUT_PARAM_RAID(2, sel) = get_state_state();
  set_pid_sum((unsigned long)state, current_state_str(),
           (unsigned long)-1->lr_full; low;
}
```

Slide Credit: Fei-Fei Li, Justin Johnson, Serena Yeung, CS 231n

Searching for interpretable cells

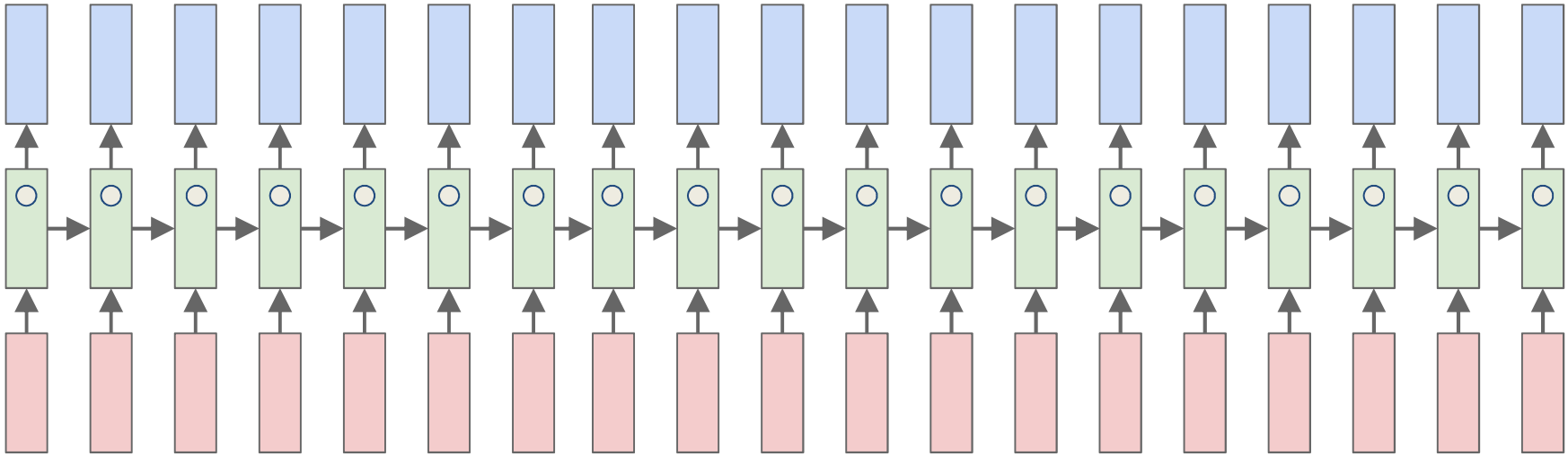

Karpathy, Johnson, and Fei-Fei: Visualizing and Understanding Recurrent Networks, ICLR Workshop 2016

Searching for interpretable cells

```
/* Unpack a filter field's string representation from user-space
 * buffer. */
char *audit_unpack_string(void **bufp, size_t *remain, size_t len)
{
  char *str;
  if (!*bufp || (len == 0) || (len > *remain))
    return ERR_PTR(-EINVAL);
  /* Of the currently implemented string fields, PATH_MAX
   * defines the longest valid length.
   */
```

Karpathy, Johnson, and Fei-Fei: Visualizing and Understanding Recurrent Networks, ICLR Workshop 2016

Searching for interpretable cells

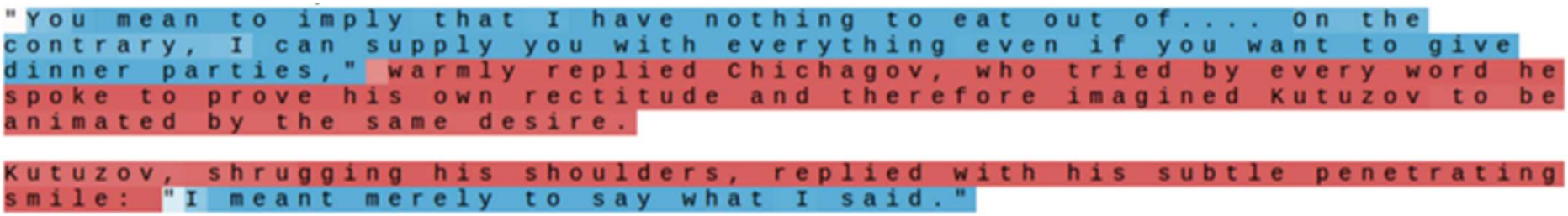

quote detection cell

Karpathy, Johnson, and Fei-Fei: Visualizing and Understanding Recurrent Networks, ICLR Workshop 2016

Searching for interpretable cells

Cell sensitive to position in line:

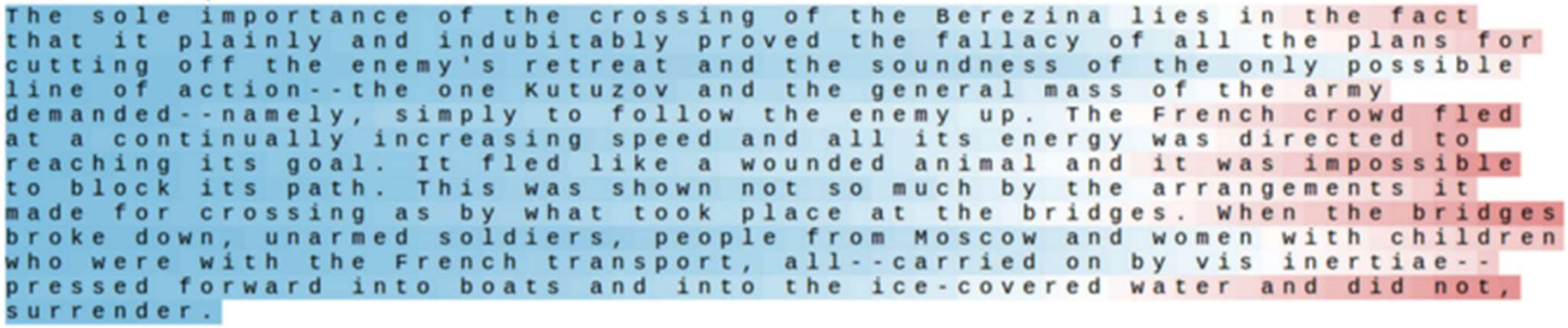

line length tracking cell

Karpathy, Johnson, and Fei-Fei: Visualizing and Understanding Recurrent Networks, ICLR Workshop 2016

Searching for interpretable cells

```
static int __dequeue_signal(struct sigpending *pending, sigset_t *mask,
    siginfo_t *info)
{
  int sig = next_signal(pending, mask);
  if (sig) {
    if (current->notifier) {
      if (sigismember(current->notifier_mask, sig)) {
        if (!(current->notifier)(current->notifier_data)) {
          clear_thread_flag(TIF_SIGPENDING);
          return 0;
        }
      }
    }
    collect_signal(sig, pending, info);
  }
  return sig;
}
```

if statement cell

Karpathy, Johnson, and Fei-Fei: Visualizing and Understanding Recurrent Networks, ICLR Workshop 2016

Searching for interpretable cells

Cell that turns on inside comments and quotes:

```
/* Duplicate LSM field information. The lsm_rule is opaque, so
 * re-initialized. */
static inline int audit_dupe_lsm_field(struct audit_field *df,
         struct audit_field *sf)
{
  int ret = 0;
  char *lsm_str;
  /* our own copy of lsm_str */
  lsm_str = kstrdup(sf->lsm_str, GFP_KERNEL);
  if (unlikely(!lsm_str))
    return -ENOMEM;
  df->lsm_str = lsm_str;
  /* our own (refreshed) copy of lsm_rule */
  ret = security_audit_rule_init(df->type, df->op, df->lsm_str,
            (void **)&df->lsm_rule);
  /* Keep currently invalid fields around in case they
   * become valid after a policy reload. */
  if (ret == -EINVAL) {
    pr_warn("audit rule for LSM \'%s\' is invalid\n",
      df->lsm_str);
    ret = 0;
  }
  return ret;
}
```

quote/comment cell

Karpathy, Johnson, and Fei-Fei: Visualizing and Understanding Recurrent Networks, ICLR Workshop 2016

Searching for interpretable cells

```
#ifdef CONFIG_AUDITSYSCALL
static inline int audit_match_class_bits(int class, u32 *mask)
{
  int i;
  if (classes[class]) {
    for (i = 0; i < AUDIT_BITMASK_SIZE; i++)
      if (mask[i] & classes[class][i])
        return 0;
  }
  return 1;
}
```

code depth cell

Karpathy, Johnson, and Fei-Fei: Visualizing and Understanding Recurrent Networks, ICLR Workshop 2016

Plan for Today

- Recurrent Neural Networks (RNNs)
  - Example Problem: (Character-level) Language modeling
  - Learning: (Truncated) BackProp Through Time (BPTT)
  - Visualizing RNNs
  - **Inference: Beam Search**
  - **Problems with gradients in “vanilla” RNNs**
  - **LSTMs (and other RNN variants)**
  - Example: Image Captioning
  - Multilayer RNNs

Beam Search

- Proceed from left to right
- Maintain N partial captions
- Expand each caption with possible next words
- Discard all but the top N new partial translations
  - Maintain score for each, e.g. product of probabilities

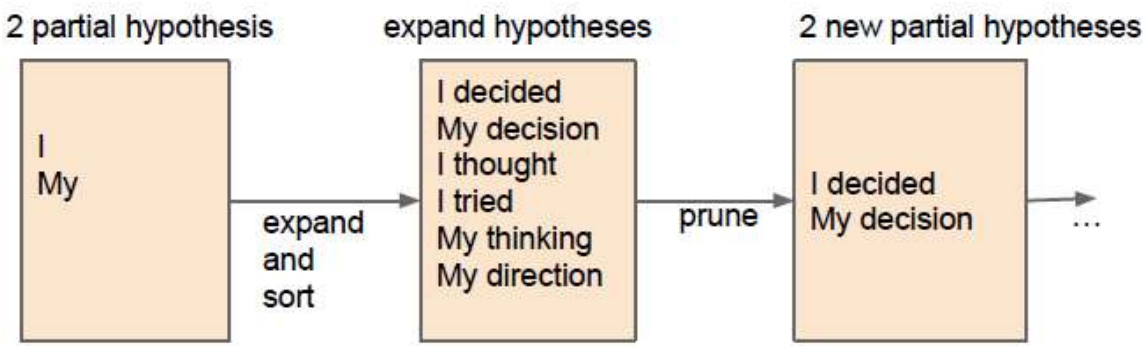

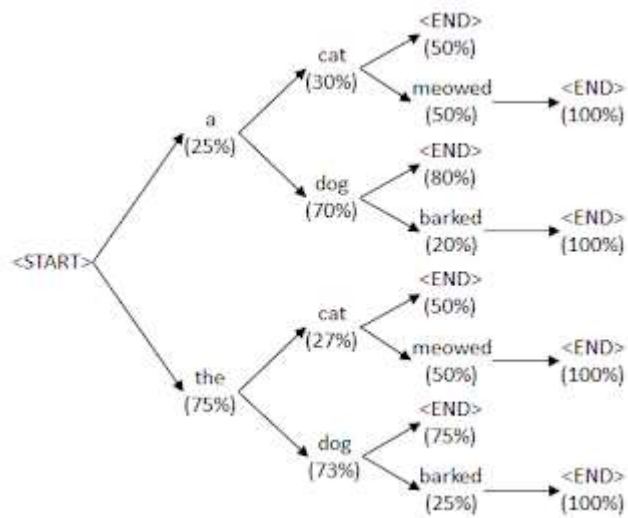

https://geekyisawesome.blogspot.com/2016/10/using-beam-search-to-generate-most.html

Vanilla RNN Gradient Flow

Bengio et al, "Learning long-term dependencies with gradient descent is difficult", IEEE Transactions on Neural Networks, 1994
Pascanu et al, "On the difficulty of training recurrent neural networks", ICML 2013

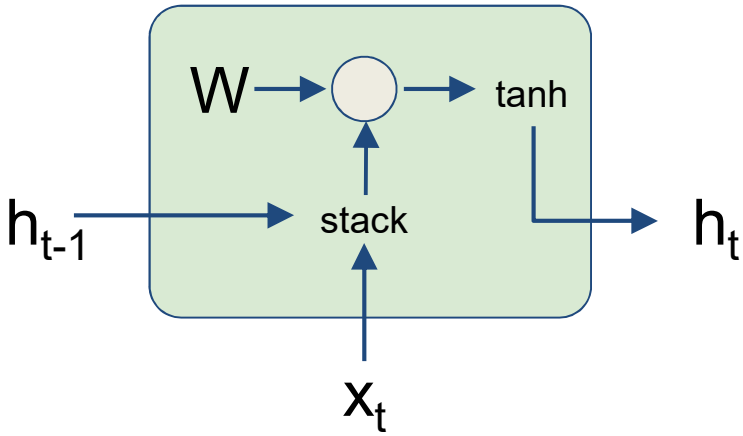

$$
\begin{aligned}
h_t &= \tanh(W_{hh} h_{t-1} + W_{xh} x_t) \\
&= \tanh\left(\begin{pmatrix} W_{hh} & W_{hx} \end{pmatrix} \begin{pmatrix} h_{t-1} \\ x_t \end{pmatrix} \right) \\
&= \tanh\left(W \begin{pmatrix} h_{t-1} \\ x_t \end{pmatrix} \right)
\end{aligned}
$$

Vanilla RNN Gradient Flow

Bengio et al, "Learning long-term dependencies with gradient descent is difficult", IEEE Transactions on Neural Networks, 1994
Pascanu et al, "On the difficulty of training recurrent neural networks", ICML 2013

Backpropagation from h_t to h_{t-1} multiplies by W (actually W_{hh})

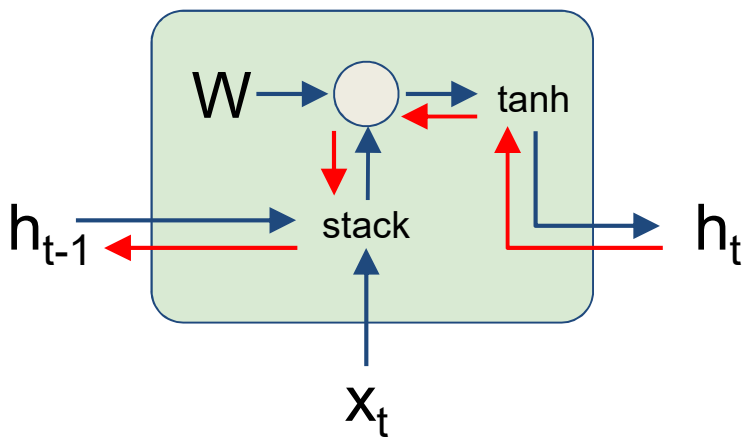

$$
\begin{aligned}
h_t &= \tanh(W_{hh}h_{t-1} + W_{xh}x_t) \\
&= \tanh\left(\begin{pmatrix} W_{hh} & W_{hx} \end{pmatrix}\begin{pmatrix} h_{t-1} \\ x_t \end{pmatrix}\right) \\
&= \tanh\left(W\begin{pmatrix} h_{t-1} \\ x_t \end{pmatrix}\right)
\end{aligned}
$$

Vanilla RNN Gradient Flow

Bengio et al, "Learning long-term dependencies with gradient descent is difficult", IEEE Transactions on Neural Networks, 1994
Pascanu et al, "On the difficulty of training recurrent neural networks", ICML 2013

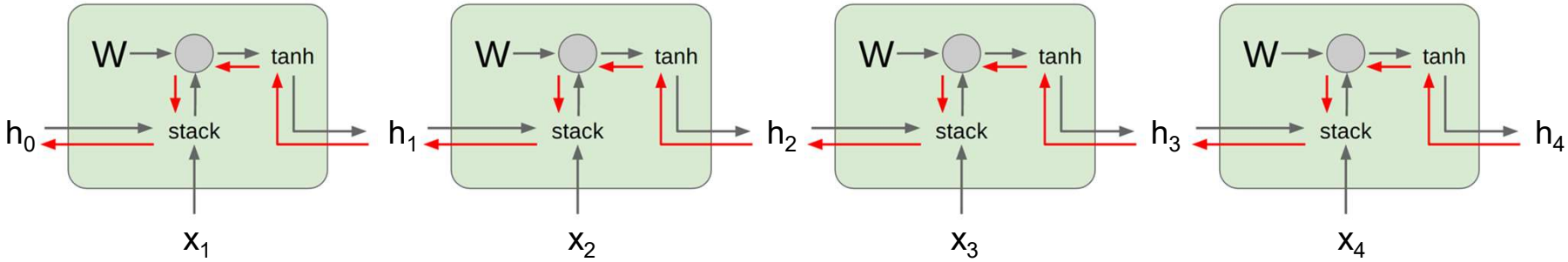

Computing gradient of h_0 involves many factors of W (and repeated tanh)

Vanilla RNN Gradient Flow

Bengio et al, "Learning long-term dependencies with gradient descent is difficult", IEEE Transactions on Neural Networks, 1994
Pascanu et al, "On the difficulty of training recurrent neural networks", ICML 2013

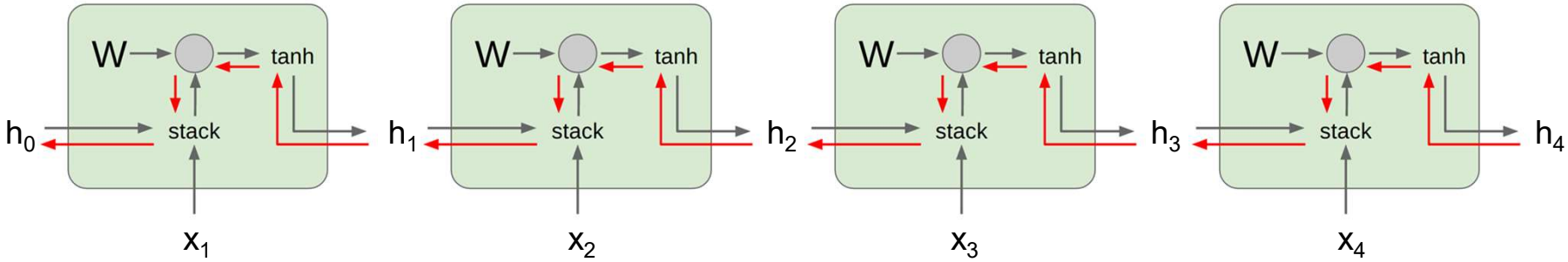

Computing gradient of h_0 involves many factors of W (and repeated tanh)

Largest singular value > 1:
Exploding gradients

Largest singular value < 1:
Vanishing gradients

Vanilla RNN Gradient Flow

Bengio et al, "Learning long-term dependencies with gradient descent is difficult", IEEE Transactions on Neural Networks, 1994
Pascanu et al, "On the difficulty of training recurrent neural networks", ICML 2013

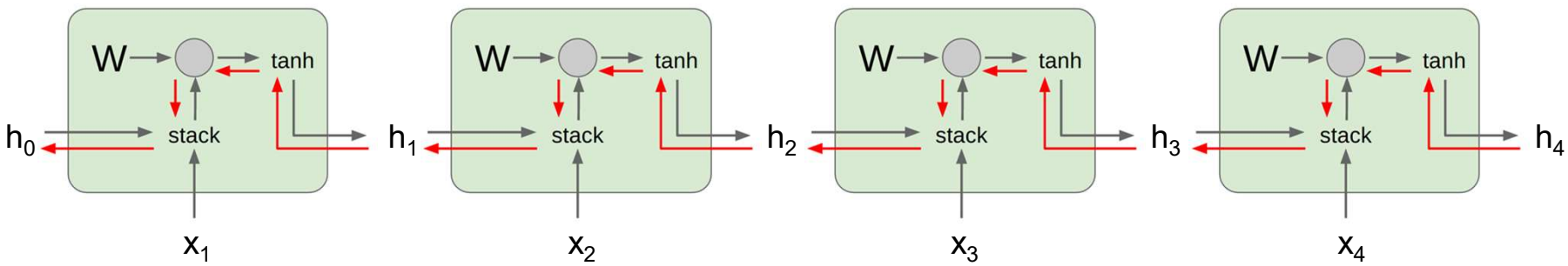

Computing gradient of h_0 involves many factors of W (and repeated tanh)

Largest singular value > 1: **Exploding gradients**

→ **Gradient clipping**: Scale gradient if its norm is too big

```
grad_norm = np.sum(grad * grad)
if grad_norm > threshold:
  grad *= (threshold / grad_norm)
```

Largest singular value < 1: **Vanishing gradients**

Vanilla RNN Gradient Flow

Bengio et al, "Learning long-term dependencies with gradient descent is difficult", IEEE Transactions on Neural Networks, 1994
Pascanu et al, "On the difficulty of training recurrent neural networks", ICML 2013

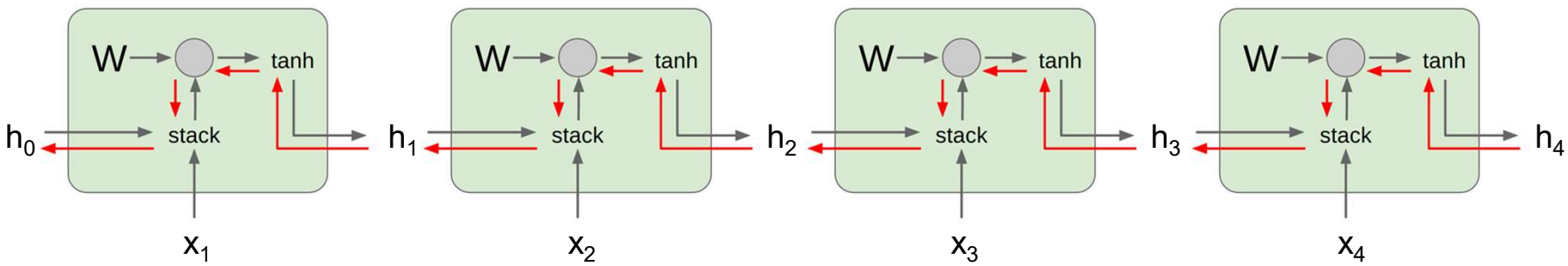

Computing gradient of h_0 involves many factors of W (and repeated tanh)

Largest singular value > 1:
Exploding gradients

Largest singular value < 1:
Vanishing gradients

→ Change RNN architecture

Long Short Term Memory (LSTM)

[Hochreiter et al., 1997]

i: Input gate, whether to write to cell
f: Forget gate, Whether to erase cell
o: Output gate, How much to reveal cell
g: Gate gate (?), How much to write to cell

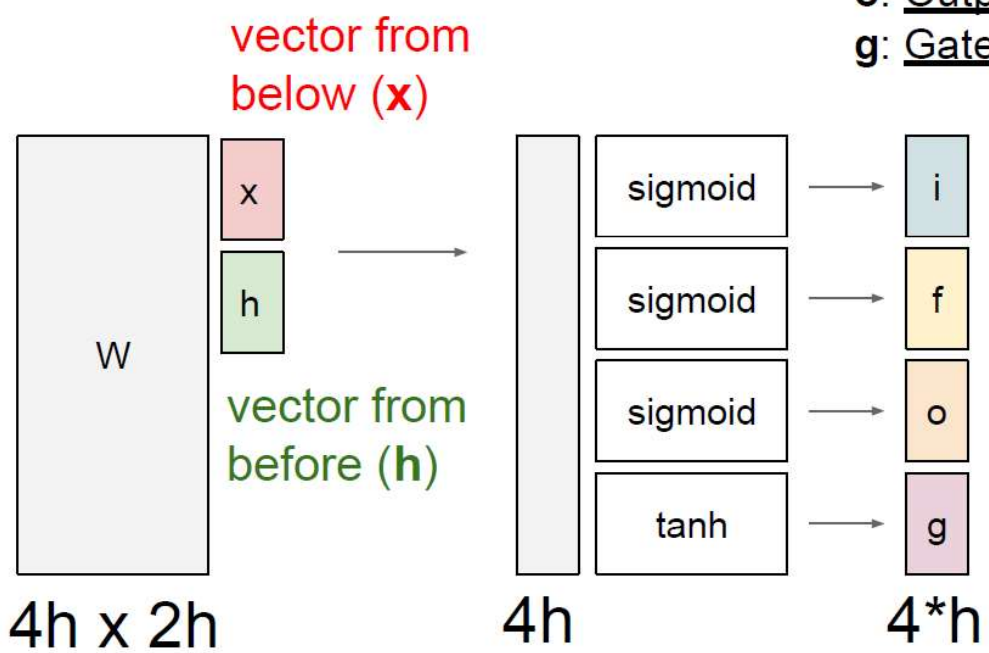

$$\begin{pmatrix} i \\ f \\ o \\ g \end{pmatrix} = \begin{pmatrix} \sigma \\ \sigma \\ \sigma \\ \tanh \end{pmatrix} W \begin{pmatrix} h_{t-1} \\ x_t \end{pmatrix}$$

$$c_t = f \odot c_{t-1} + i \odot g$$

$$h_t = o \odot \tanh(c_t)$$

Hochreiter and Schmidhuber, “Long Short Term Memory”, Neural Computation 1997

Meet LSTMs

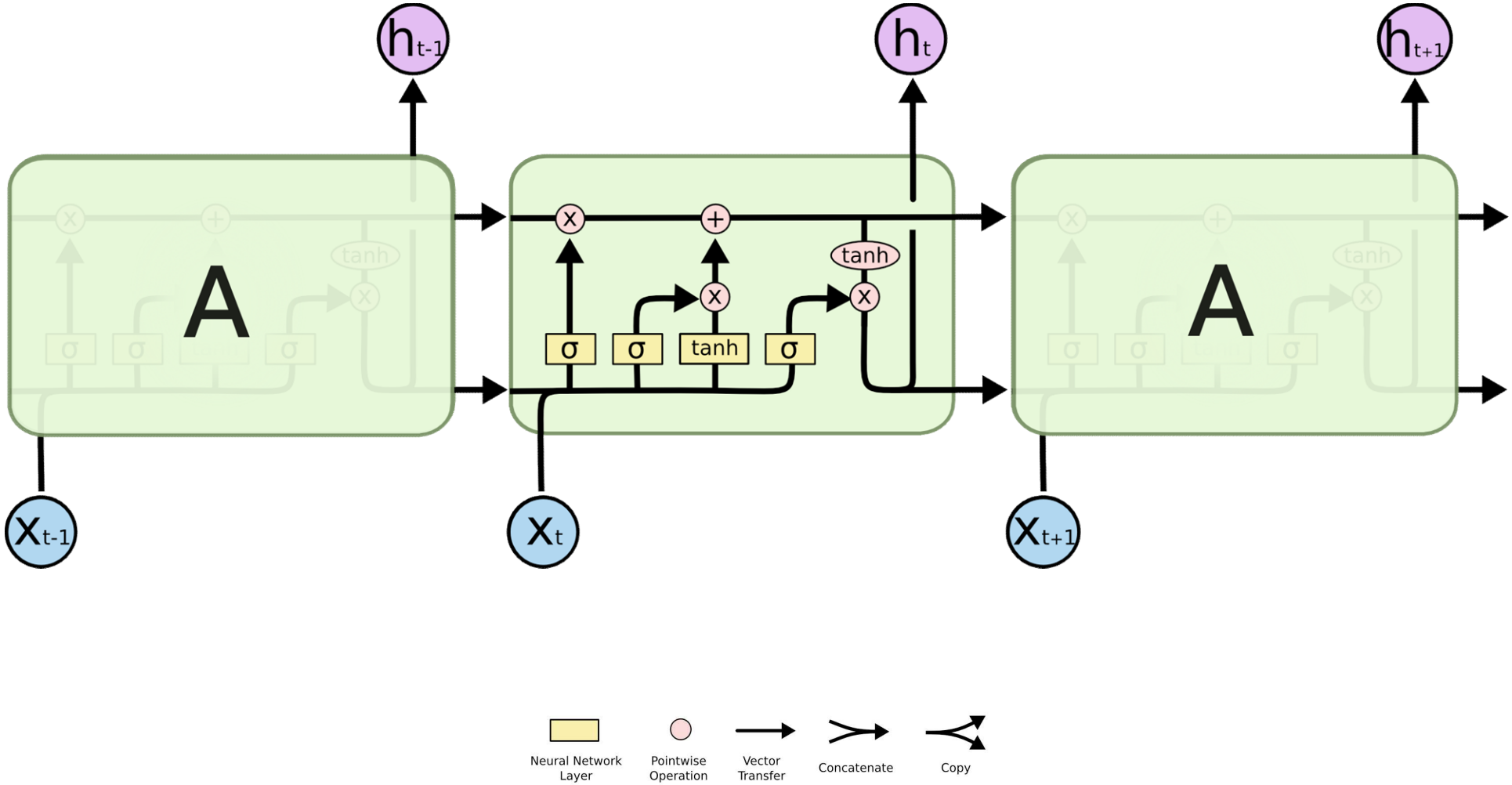

Image Credit: Christopher Olah (http://colah.github.io/posts/2015-08-Understanding-LSTMs/)

LSTMs Intuition: Memory

- Cell State / Memory

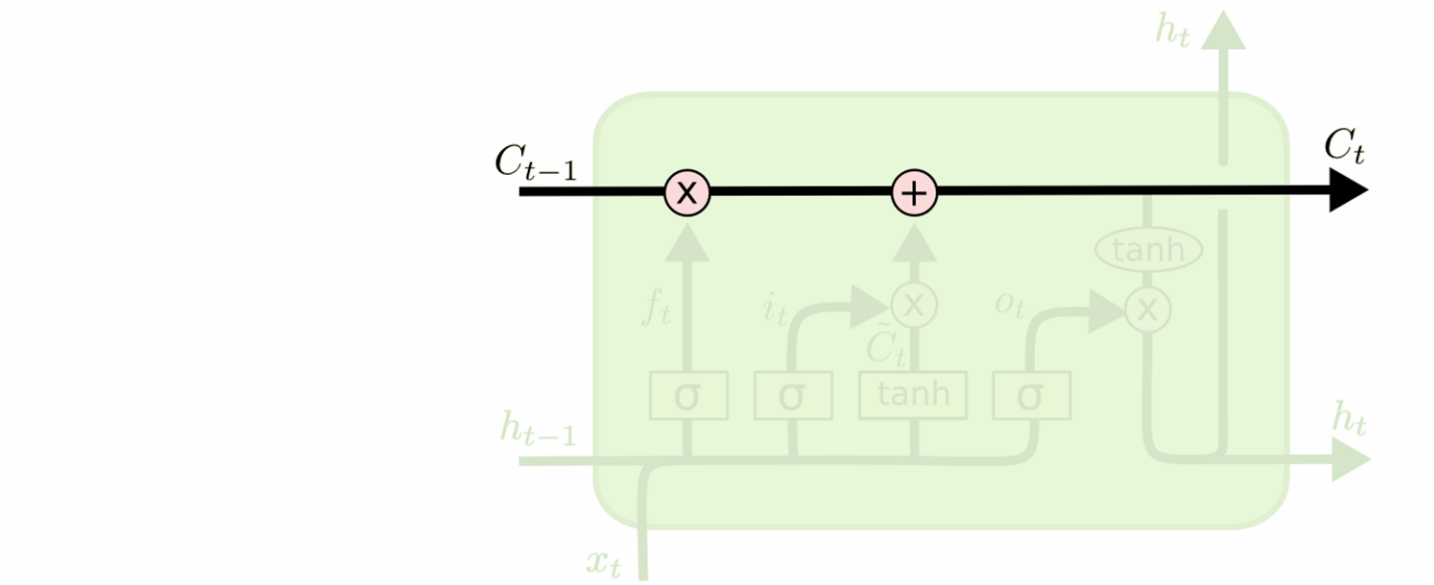

 Image Credit: Christopher Olah (http://colah.github.io/posts/2015-08-Understanding-LSTMs/)

LSTMs Intuition: Forget Gate

- Should we continue to remember this “bit” of information or not?

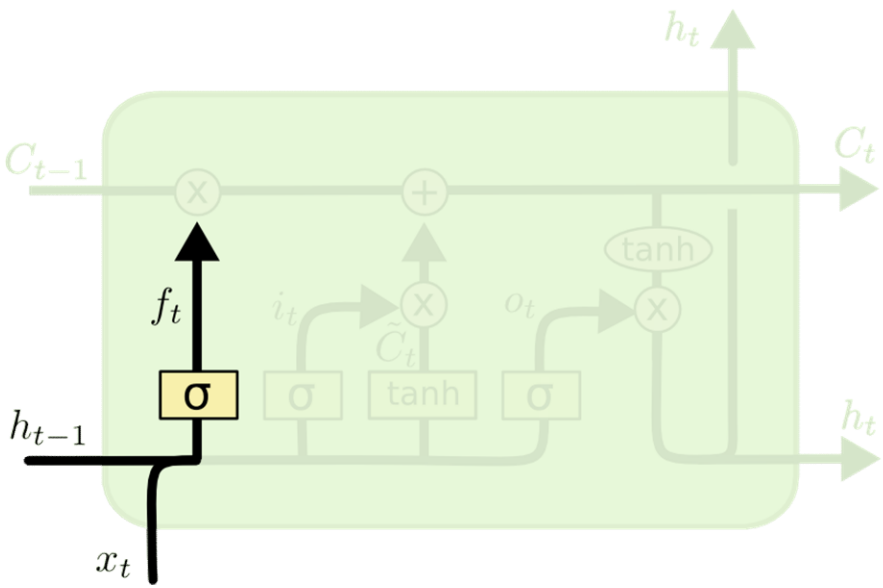

$$f_t = \sigma\left(W_f \cdot [h_{t-1}, x_t] \; + \; b_f\right)$$

Image Credit: Christopher Olah (http://colah.github.io/posts/2015-08-Understanding-LSTMs/)

LSTMs Intuition: Input Gate

- Should we update this "bit" of information or not?
  - If so, with what?

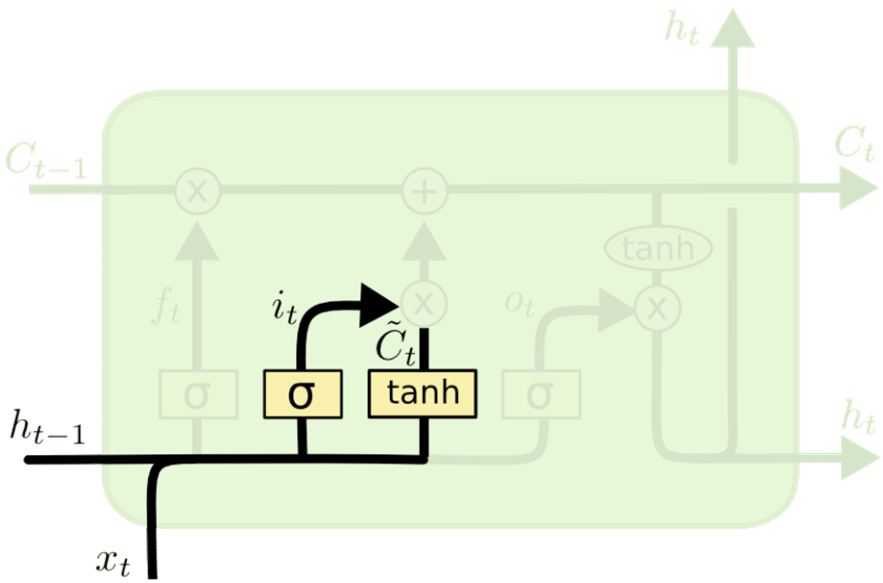

$$i_t = \sigma\left(W_i \cdot [h_{t-1}, x_t] \ + \ b_i\right)$$

$$\tilde{C}_t = \tanh(W_C \cdot [h_{t-1}, x_t] \ + \ b_C)$$

Image Credit: Christopher Olah (http://colah.github.io/posts/2015-08-Understanding-LSTMs/)

LSTMs Intuition: Memory Update

- Forget that + memorize this

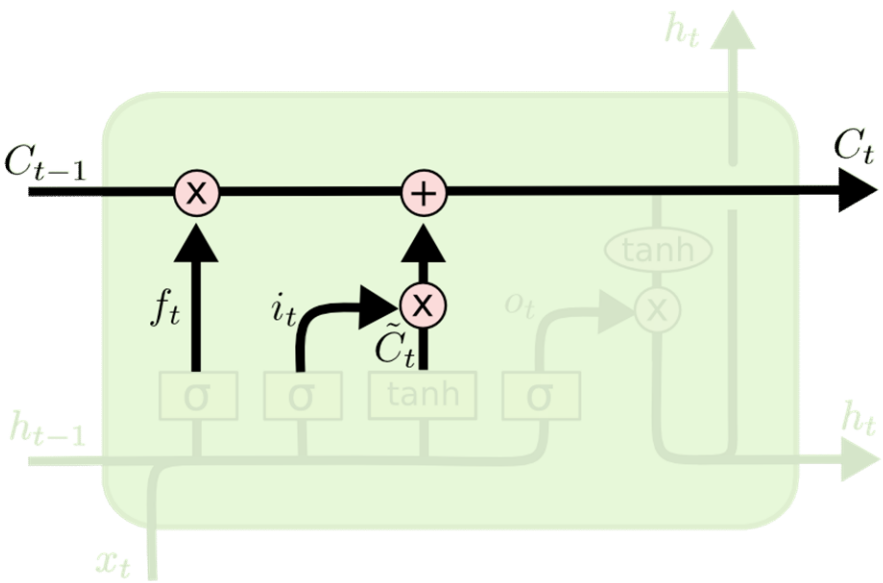

$$C_t = f_t * C_{t-1} + i_t * \tilde{C}_t$$

Image Credit: Christopher Olah (http://colah.github.io/posts/2015-08-Understanding-LSTMs/)

LSTMs Intuition: Output Gate

- Should we output this “bit” of information to “deeper” layers?

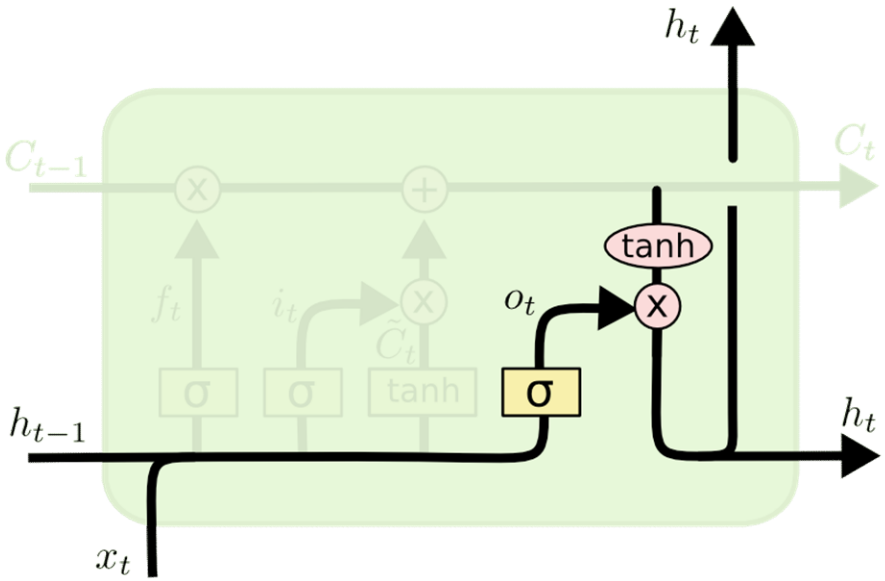

$$o_t = \sigma\left(W_o\ [h_{t-1}, x_t]\ +\ b_o\right)$$

$$h_t = o_t * \tanh\left(C_t\right)$$

Image Credit: Christopher Olah (http://colah.github.io/posts/2015-08-Understanding-LSTMs/)

LSTMs Intuition: Additive Updates

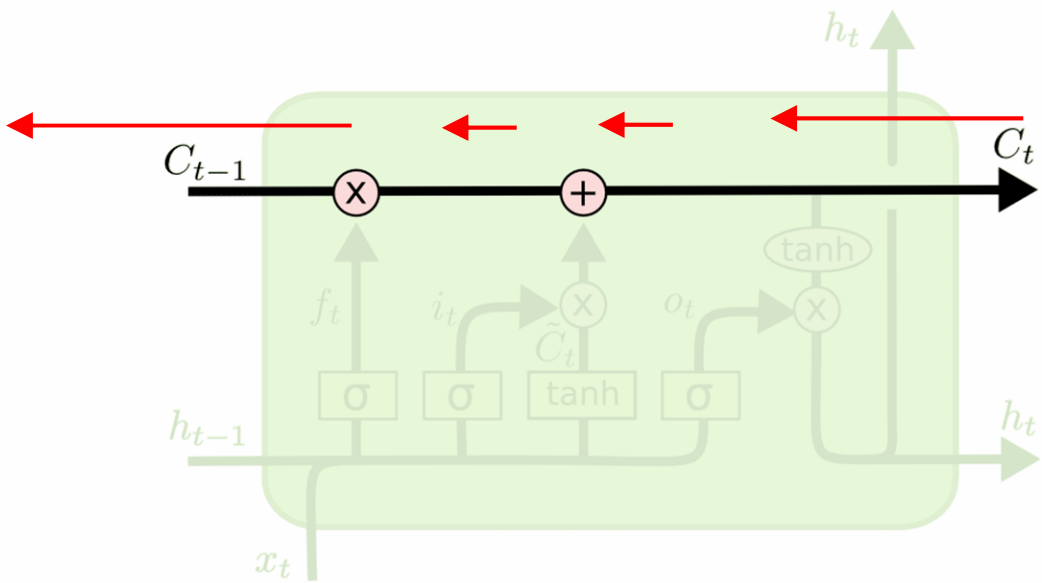

Backpropagation from c_t to c_{t-1} only elementwise multiplication by f, no matrix multiply by W

Image Credit: Christopher Olah (http://colah.github.io/posts/2015-08-Understanding-LSTMs/)

LSTMs Intuition: Additive Updates

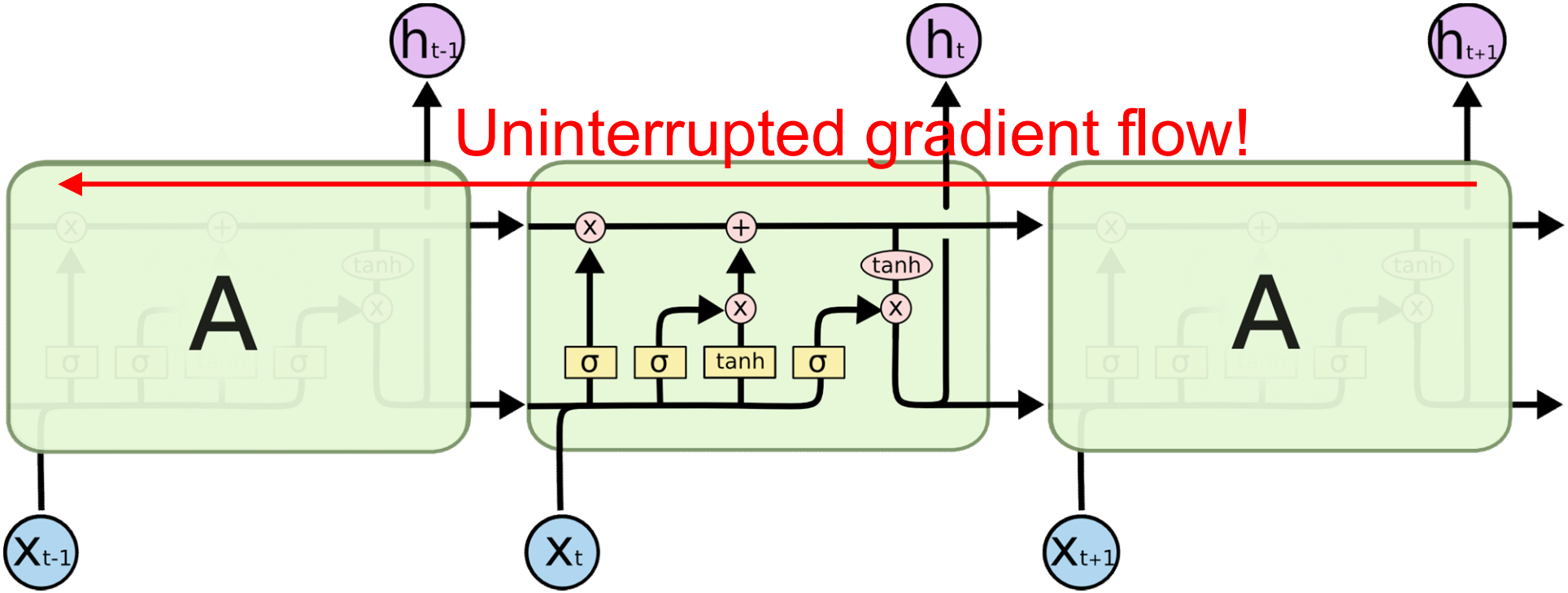

Image Credit: Christopher Olah (http://colah.github.io/posts/2015-08-Understanding-LSTMs/)

LSTMs Intuition: Additive Updates

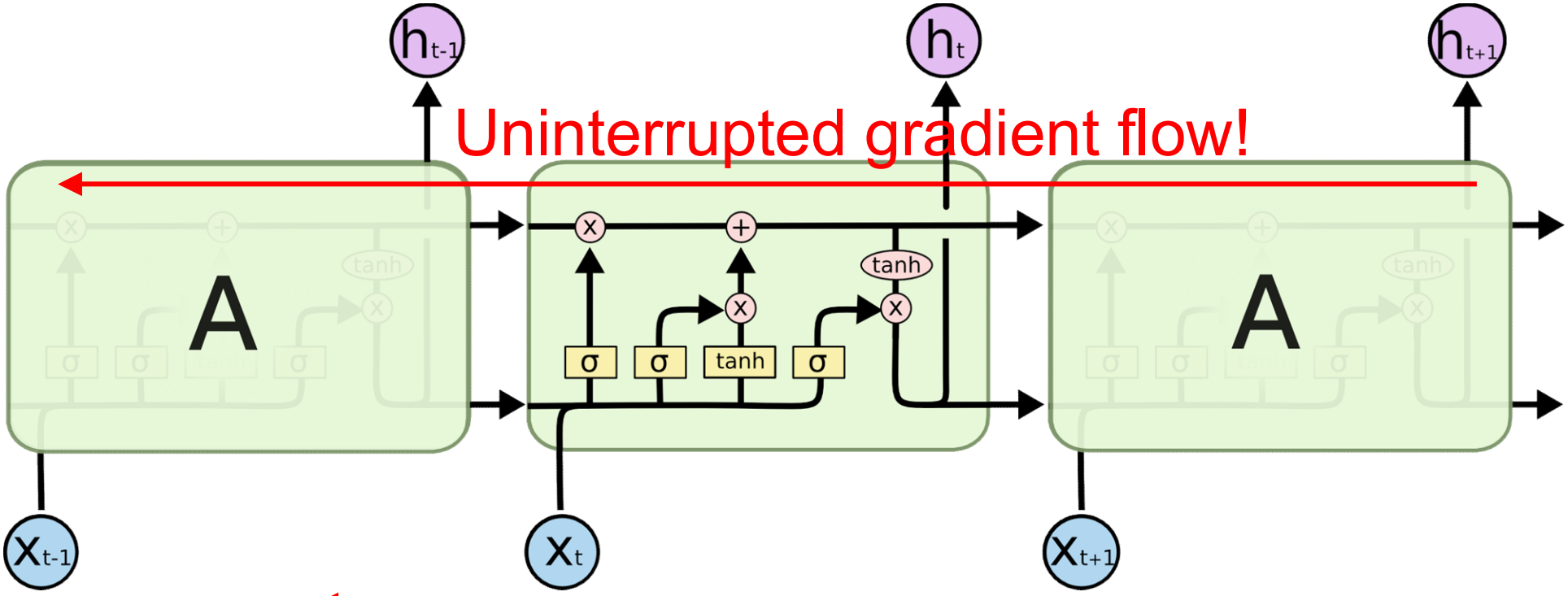

Similar to ResNet!

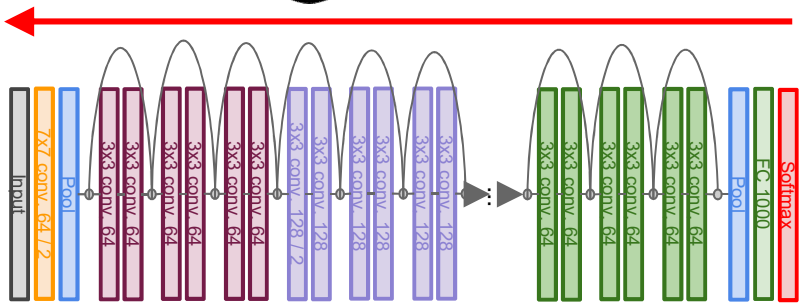

Image Credit: Christopher Olah (http://colah.github.io/posts/2015-08-Understanding-LSTMs/)

LSTMs

- A pretty sophisticated cell

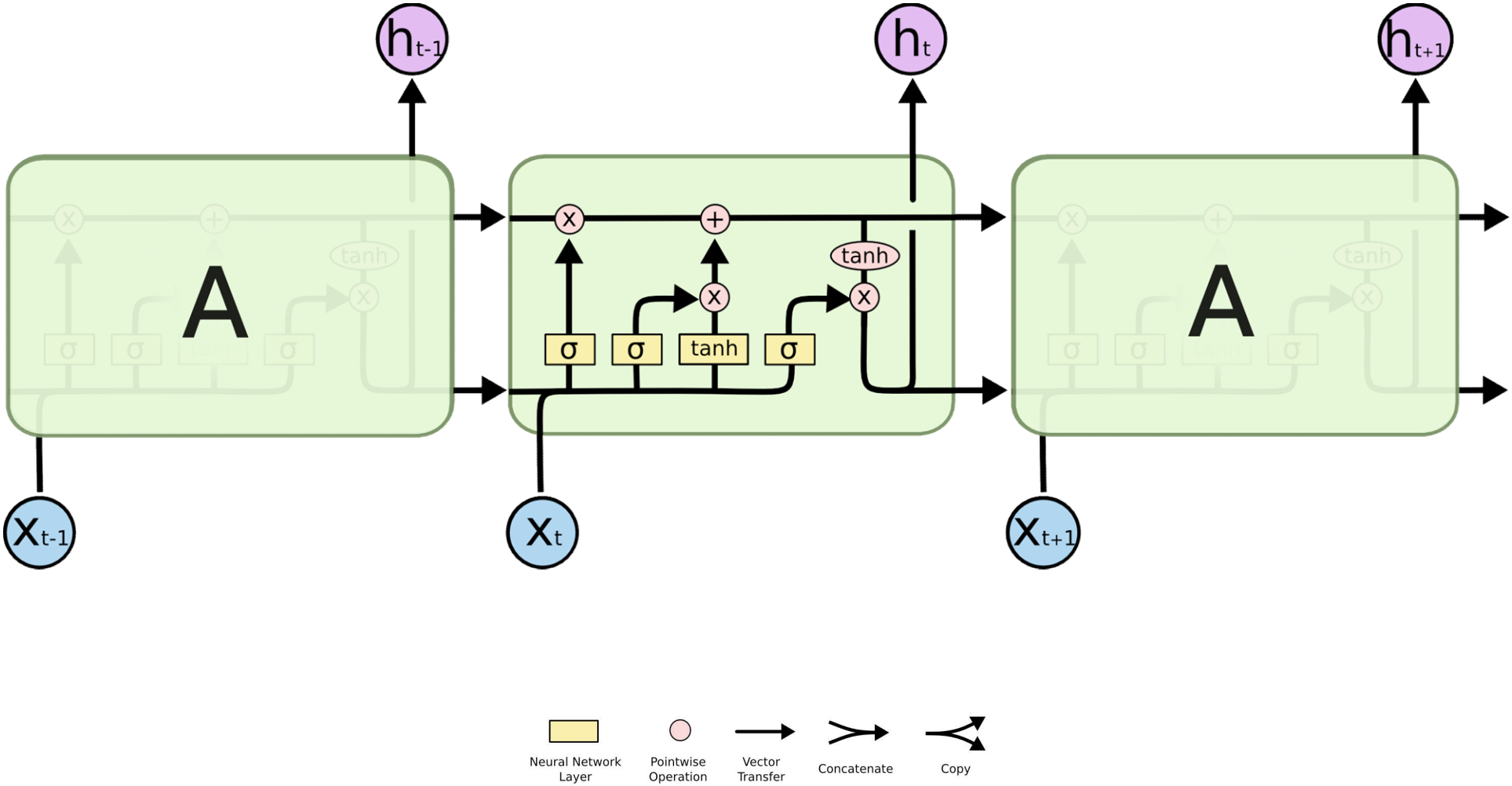

 Image Credit: Christopher Olah (http://colah.github.io/posts/2015-08-Understanding-LSTMs/)

LSTM Variants #1: Peephole Connections

- Let gates see the cell state / memory

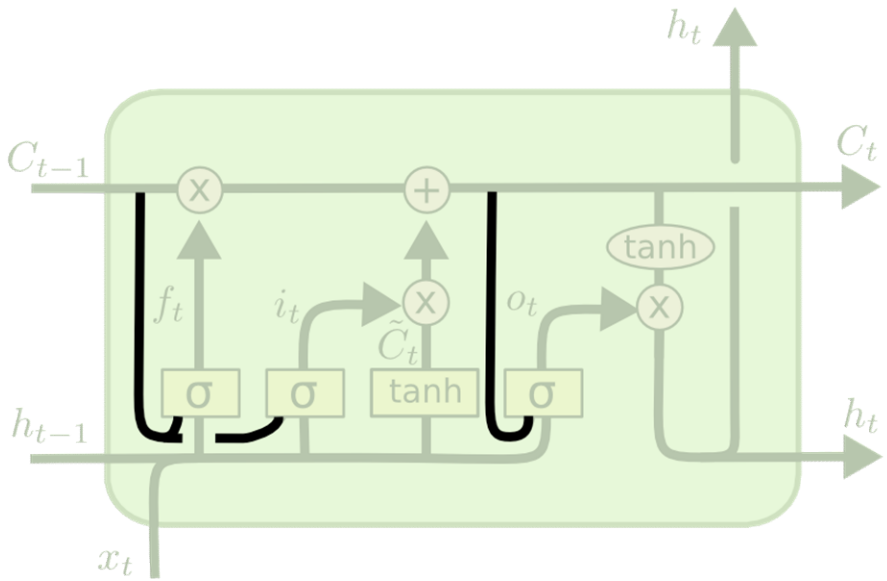

$$f_t = \sigma\left(W_f \cdot [\boldsymbol{C_{t-1}}, h_{t-1}, x_t] \ + \ b_f\right)$$
$$i_t = \sigma\left(W_i \cdot [\boldsymbol{C_{t-1}}, h_{t-1}, x_t] \ + \ b_i\right)$$
$$o_t = \sigma\left(W_o \cdot [\boldsymbol{C_t}, h_{t-1}, x_t] \ + \ b_o\right)$$

Image Credit: Christopher Olah (http://colah.github.io/posts/2015-08-Understanding-LSTMs/)

LSTM Variants #2: Coupled Gates

- Only memorize new if forgetting old

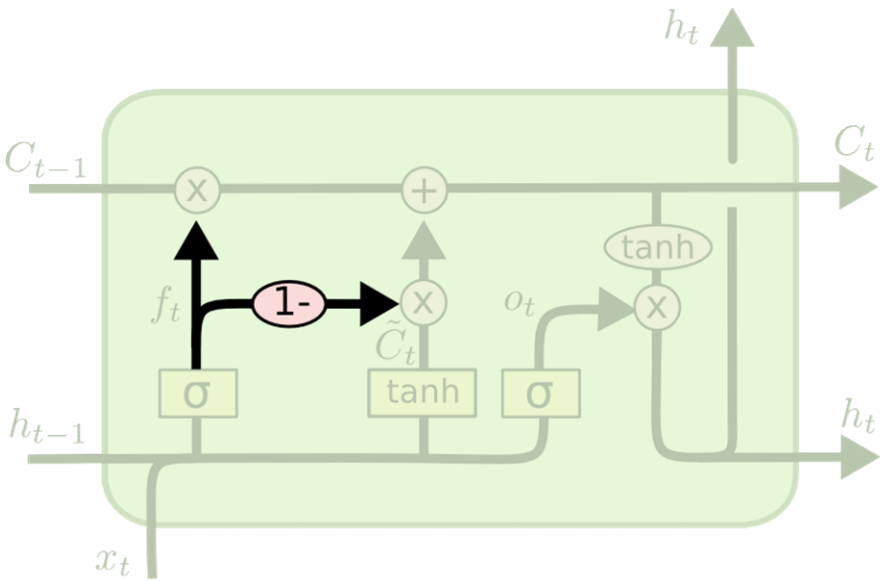

$$C_t = f_t * C_{t-1} + (\mathbf{1} - \boldsymbol{f_t}) * \tilde{C}_t$$

Image Credit: Christopher Olah (http://colah.github.io/posts/2015-08-Understanding-LSTMs/)

LSTM Variants #3: Gated Recurrent Units

- Changes:
  - No explicit memory; memory = hidden output
  - Z = memorize new and forget old

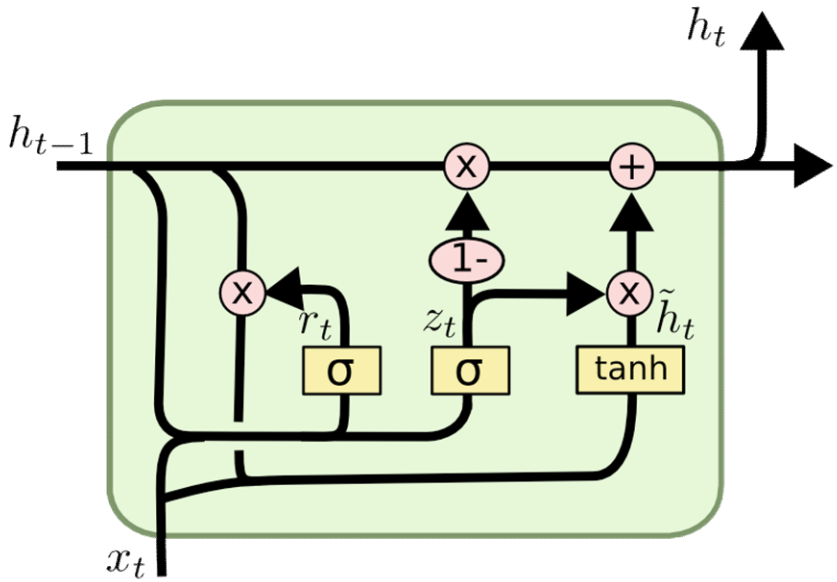

$$z_t = \sigma\left(W_z \cdot [h_{t-1}, x_t]\right)$$

$$r_t = \sigma\left(W_r \cdot [h_{t-1}, x_t]\right)$$

$$\tilde{h}_t = \tanh\left(W \cdot [r_t * h_{t-1}, x_t]\right)$$

$$h_t = (1 - z_t) * h_{t-1} + z_t * \tilde{h}_t$$

Image Credit: Christopher Olah (http://colah.github.io/posts/2015-08-Understanding-LSTMs/)

Long Short Term Memory (LSTM)

Vanilla RNN

$$h_t = \tanh\left(W\begin{pmatrix} h_{t-1} \\ x_t \end{pmatrix}\right)$$

LSTM

$$\begin{pmatrix} i \\ f \\ o \\ g \end{pmatrix} = \begin{pmatrix} \sigma \\ \sigma \\ \sigma \\ \tanh \end{pmatrix} W \begin{pmatrix} h_{t-1} \\ x_t \end{pmatrix}$$

$$c_t = f \odot c_{t-1} + i \odot g$$

$$h_t = o \odot \tanh(c_t)$$

Hochreiter and Schmidhuber, “Long Short Term Memory”, Neural Computation 1997

Other RNN Variants

[*An Empirical Exploration of Recurrent Network Architectures,* Jozefowicz et al., 2015]

MUT1:

$$
\begin{aligned}
z &= \mathrm{sigm}(W_{\mathrm{xz}} x_t + b_{\mathrm{z}}) \\
r &= \mathrm{sigm}(W_{\mathrm{xr}} x_t + W_{\mathrm{hr}} h_t + b_{\mathrm{r}}) \\
h_{t+1} &= \tanh(W_{\mathrm{hh}}(r \odot h_t) + \tanh(x_t) + b_{\mathrm{h}}) \odot z \\
&+ h_t \odot (1 - z)
\end{aligned}
$$

MUT2:

$$
\begin{aligned}
z &= \mathrm{sigm}(W_{\mathrm{xz}} x_t + W_{\mathrm{hz}} h_t + b_{\mathrm{z}}) \\
r &= \mathrm{sigm}(x_t + W_{\mathrm{hr}} h_t + b_{\mathrm{r}}) \\
h_{t+1} &= \tanh(W_{\mathrm{hh}}(r \odot h_t) + W_{xh} x_t + b_{\mathrm{h}}) \odot z \\
&+ h_t \odot (1 - z)
\end{aligned}
$$

MUT3:

$$
\begin{aligned}
z &= \mathrm{sigm}(W_{\mathrm{xz}} x_t + W_{\mathrm{hz}} \tanh(h_t) + b_{\mathrm{z}}) \\
r &= \mathrm{sigm}(W_{\mathrm{xr}} x_t + W_{\mathrm{hr}} h_t + b_{\mathrm{r}}) \\
h_{t+1} &= \tanh(W_{\mathrm{hh}}(r \odot h_t) + W_{xh} x_t + b_{\mathrm{h}}) \odot z \\
&+ h_t \odot (1 - z)
\end{aligned}
$$

Multilayer RNNs

$$h_t^l = \tanh W^l \begin{pmatrix} h_t^{l-1} \\ h_{t-1}^l \end{pmatrix}$$

$h \in \mathbb{R}^n$. W^l $[n \times 2n]$

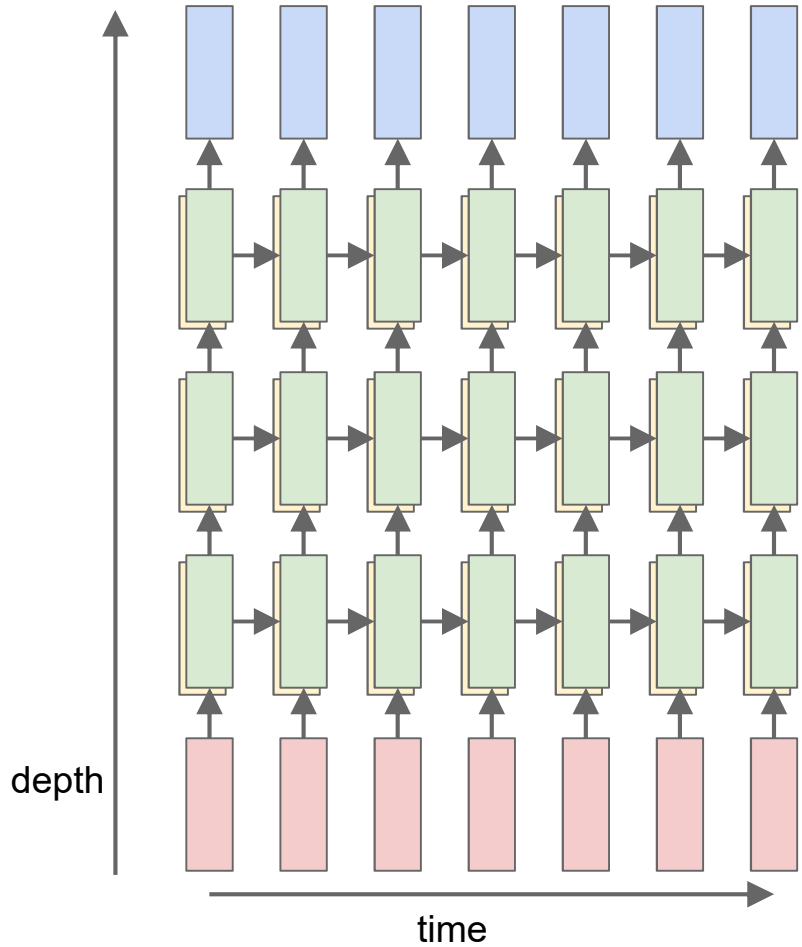

Slide Credit: Fei-Fei Li, Justin Johnson, Serena Yeung, CS 231n

Summary

- RNNs allow a lot of flexibility in architecture design
- Vanilla RNNs are simple but don’t work very well
- Common to use LSTM or GRU: their additive interactions improve gradient flow
- Backward flow of gradients in RNN can explode or vanish. Exploding is controlled with gradient clipping. Vanishing is controlled with additive interactions (LSTM)
- Better/simpler architectures are a hot topic of current research
- Better understanding (both theoretical and empirical) is needed.