Eva-storage

By Jaeho Bang, Shreya Dubey, Ujjwal Arora

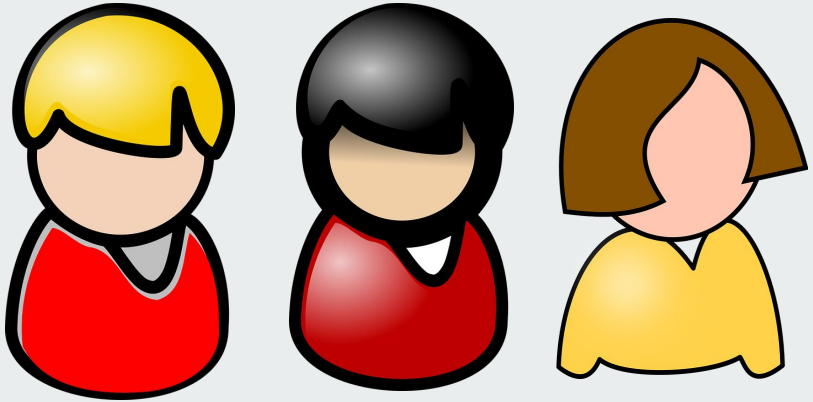

Goals

- **75%:**
  - Build a prototype for the compression and indexing methods we discussed - done
  - Research how to make features extracted from the network robust - done
- **100%:**
  - Evaluate clustering methods - done
  - Build all clustering related modules - done
  - Evaluate robustness of features extracted from the network - done
- **125%:**
  - Build the system end-to-end

The Architecture

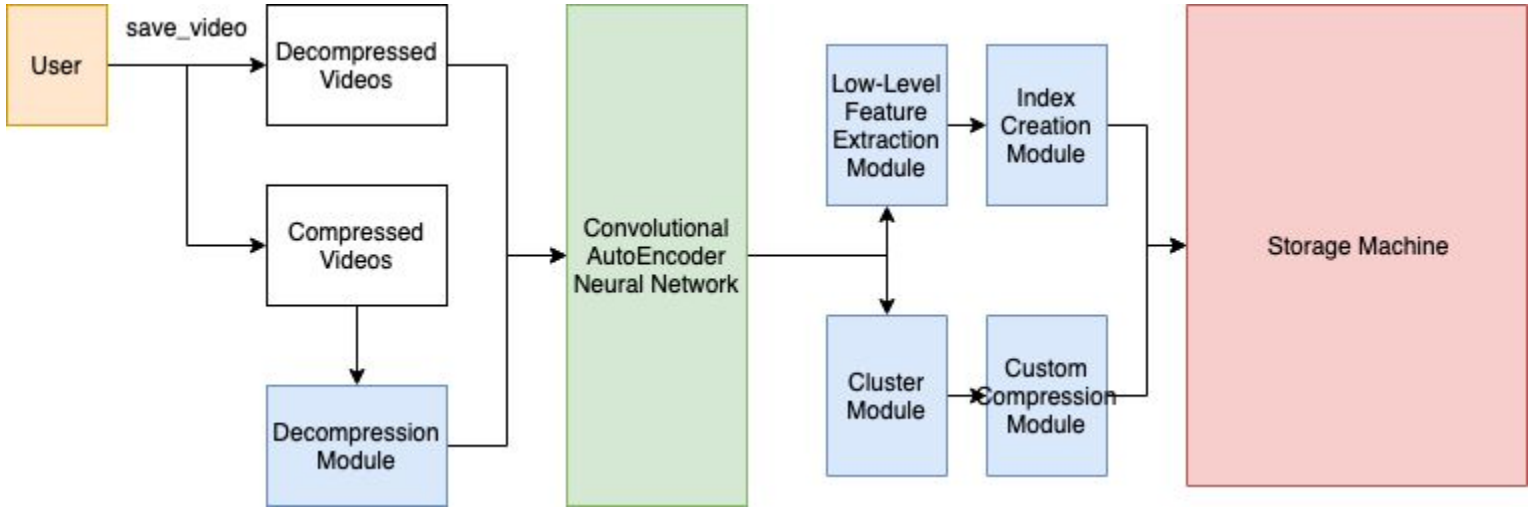

Convolutional Auto Encoders

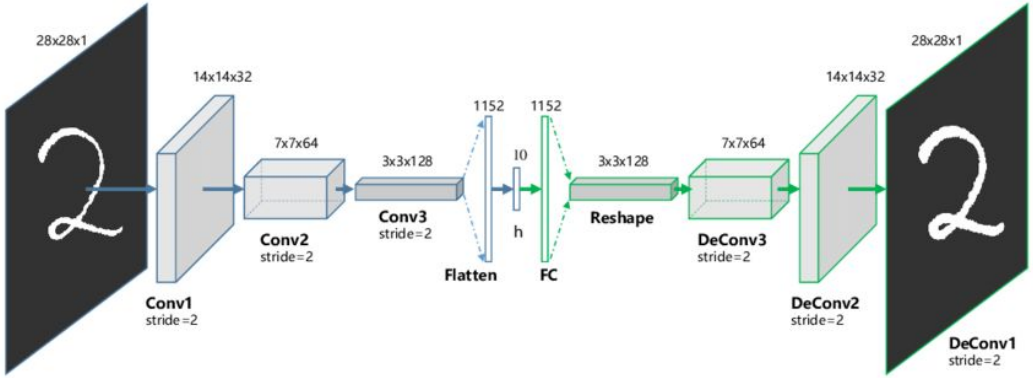

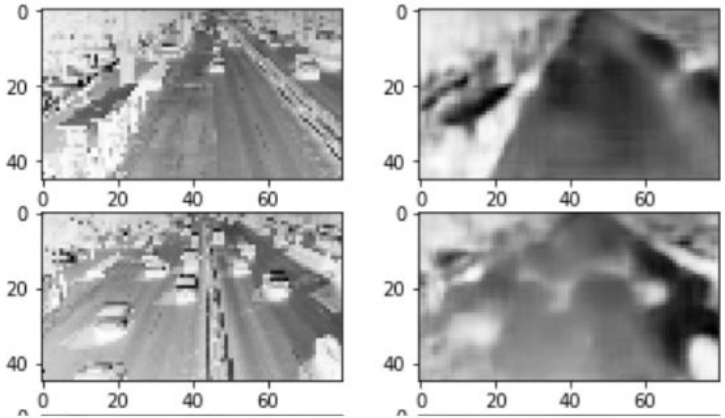

Test for Correctness

Compression

1. Manual inspection of image frames
2. Extensive test cases to make sure functions behave as we intend them to

Indexing

1. Manual inspection of the indexing results with seen and unseen images.
2. Evaluation with rotated and scaled version of images.

Clustering Experiment on UA-DETRAC

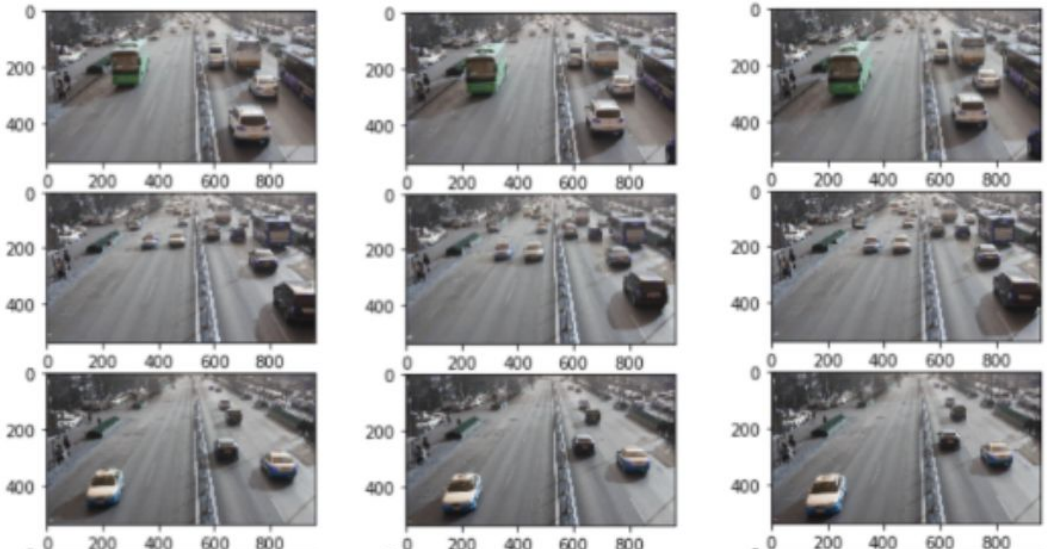

Clustering Experiment on UA-DETRAC

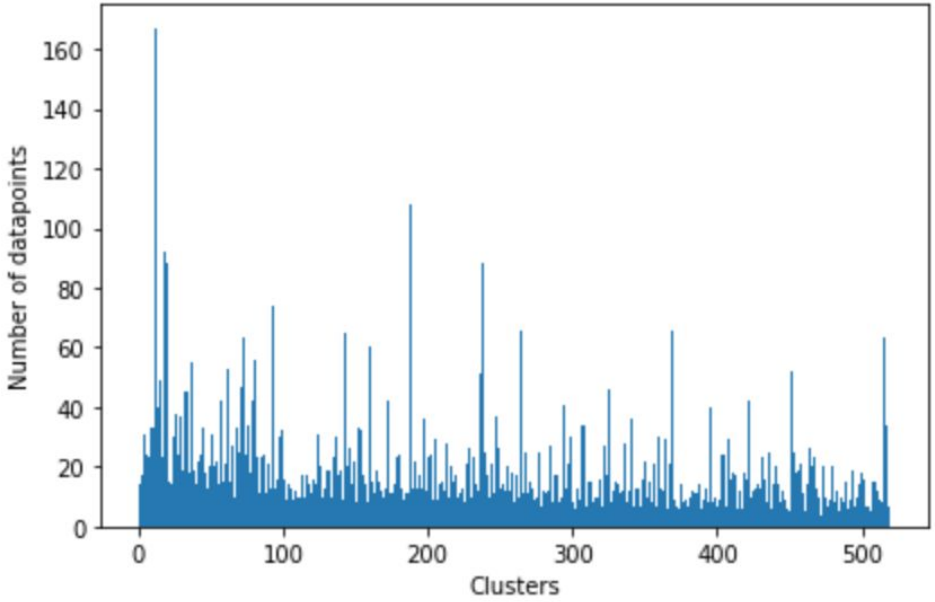

Clustering Evaluation

1. Entire UA-DETRAC Training Data (around 80,000 images)
2. Color vs Black Images as input
3. Image input dimensions
4. Network Layer Depth Test

Cluster vs no Cluster

Analysis on various machine learning models (linear svm, multi-layer perceptron, random forest)

Cluster Version:
Pick frame from each cluster

- Train the models only on the picked frames from training data
- Use picked frames from test dataset for evaluation and extend its labels (vehicle type, speed, intersection, vehicle color) to all the frames within the cluster
- Compute the score between these labels vs ground truth

No Cluster Version:

- Use all the images in the training data
- Use all the images with their corresponding labels in the test data

Results:

Clustered Version is 72x faster in training the models
The accuracy of the clustered version test data is actually either on par or slightly better

Color vs Black and White Images as Inputs

We wondered whether color images or b&w images would be better as inputs for the clustering pipeline and training the data

Result:

Color images were slightly better - Accuracy increase of 1%, training speed increase of 1.5x

However, memory usage is 3x for color images (3 channels)

Image Input Dimension / Network Depth Test

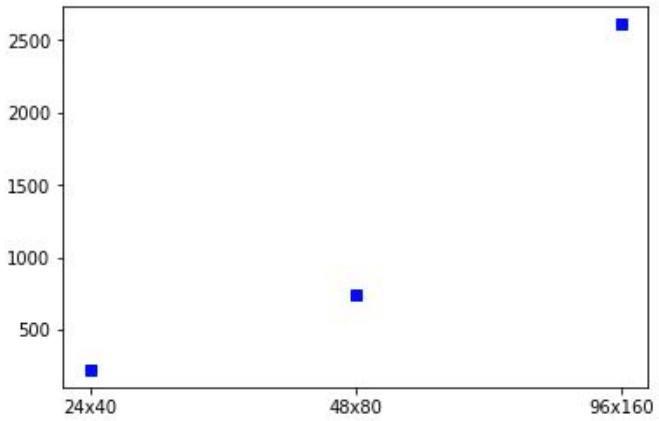

24x40, 48x80, 96x160 were used for this test

Training time for the network increases quadratically with input size

Accuracy of machine learning modules improves by 0.2% with increase input size

Network Layer Depth Test

We varied the number of convolutional layers used to derived the compressed state (4,8,12)

Training time is very similar

Accuracy actually gets worse as we add more layers

Initial Indexing Model

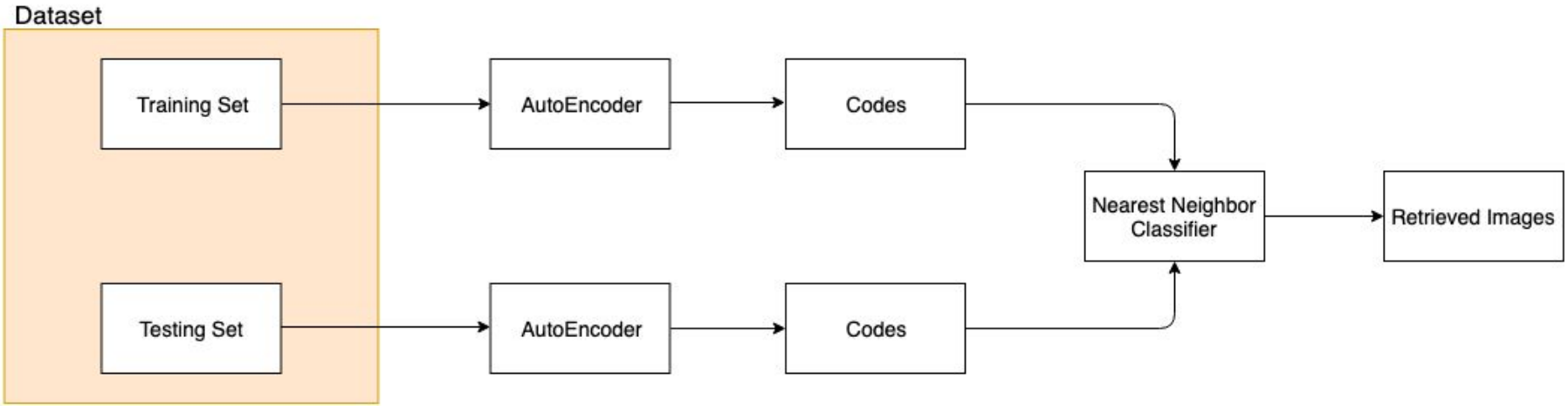

Improved Indexing Model

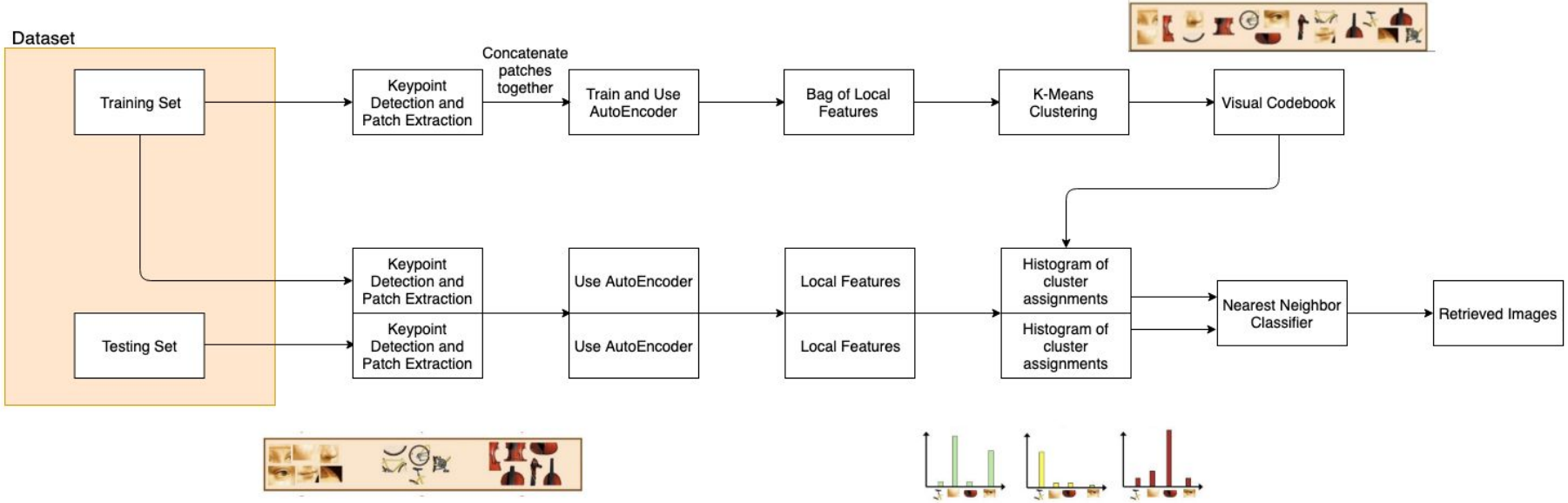

Improved Model: Querying a Seen Frame

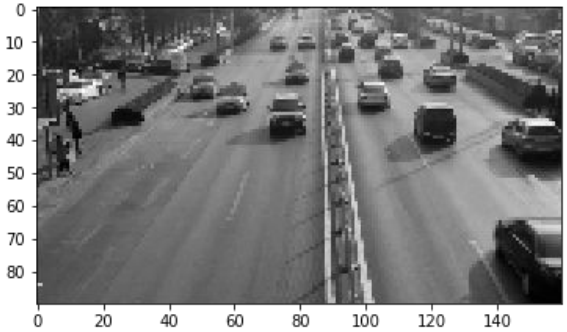





Improved Model: Querying an Unseen Frame





Improved Model: Rotated and Scaled Frame

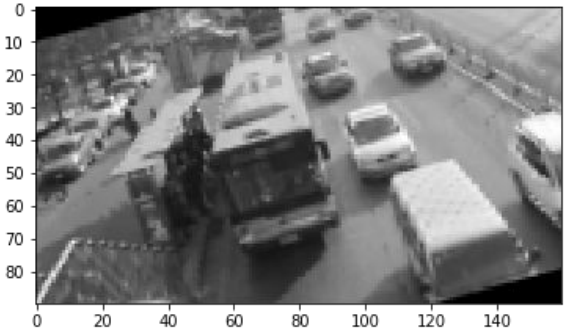

Next Steps

Compression:

- Implement the custom compression module
- Integration with indexing modules

Indexing:

- Explore convolutional kernel network
- Some sort of metrics on the indexing method
- Explore grouping methods for similar features for the index creation module

Thank You!


WILL WE FIND INTELLIGENT LIFE?
COULD IT BE RIGHT HERE ON EARTH?
COULD IT BE THIS MAN?
I USED MMAP FOR MY DB
THE SEARCH CONTINUES
poorlydrawnlines.com